特别说明

此资料来自百度文库（http://wenku.baidu.com/）

您目前所看到的文档是使用的**抱米花百度文库下载器**所生成

此文档原地址来自

http://wenku.baidu.com/view/c3b5a6a2b0717fd5360cdc4a.html

感谢您的支持

抱米花

http://blog.sina.com.cn/lotusbaob

VISIT…

LANZAROTE

Caliente.com

Fluent ***Combustion Modeling Case Studies***
1999 User Group Meeting Short Course

Graham Goldin

Fluent Inc.

Three cases studies:

- IFRF swirling pulverized coal flame
- GE LM-1600 gas turbine combustor
- Large Eddy Simulation of LPC instability

Case 1: IFRF swirling pulverized coal flame

- IFRF industrial scale furnace
- Built on simulation by Peters and Weber (1997), *Mathematical Modeling of a 2.4 MW Swirling, Pulverized Coal Flame*, Combustion Science and Technology, **122**, 131 [Ref. 1]

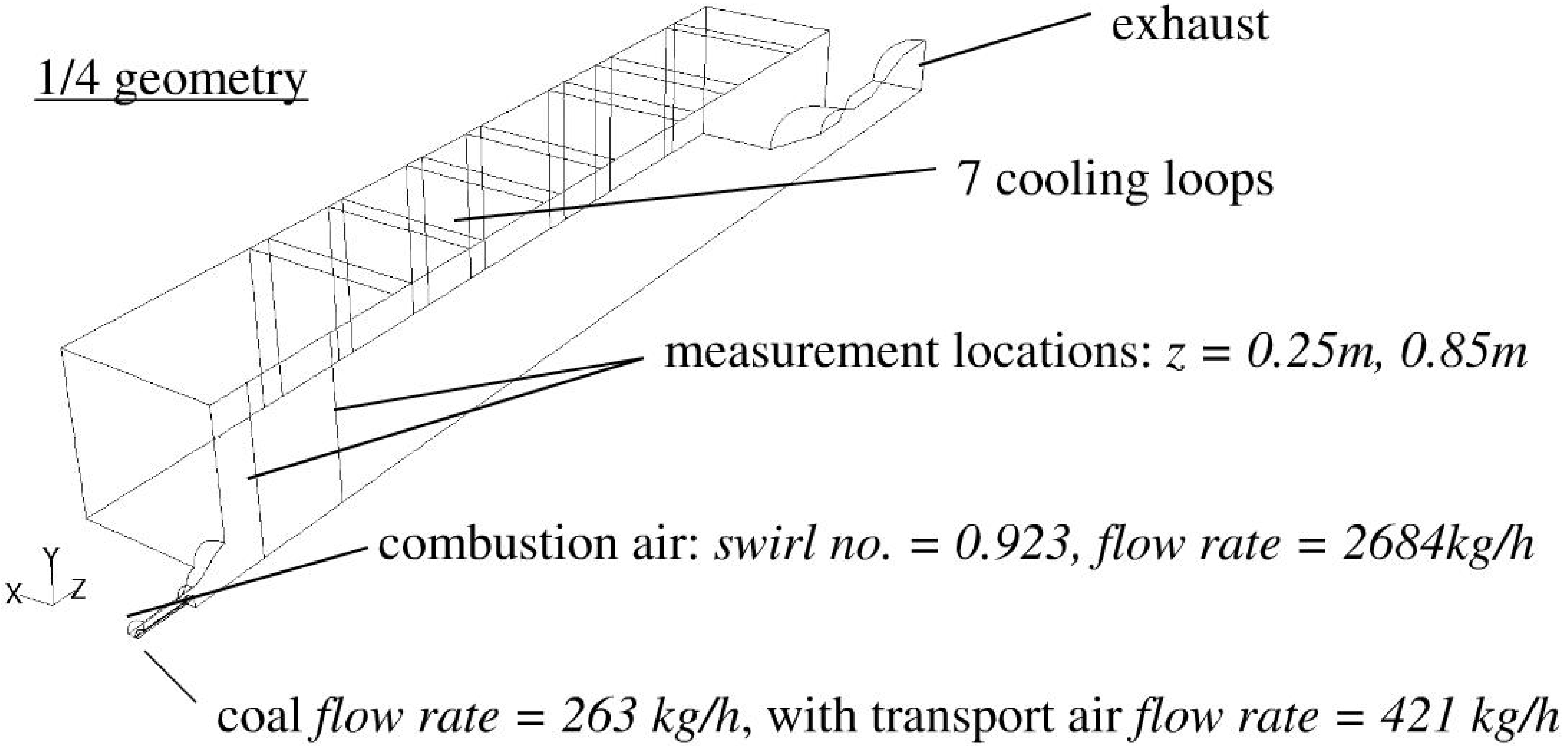

FLUENT

Grid

- 3D, one quarter geometry model due to periodicity
- Unstructured hexahedral mesh
  - 70k cells before adaption
  - 260k cells after region adaption near inlet
  - Maximum equi-angle skew of 0.53

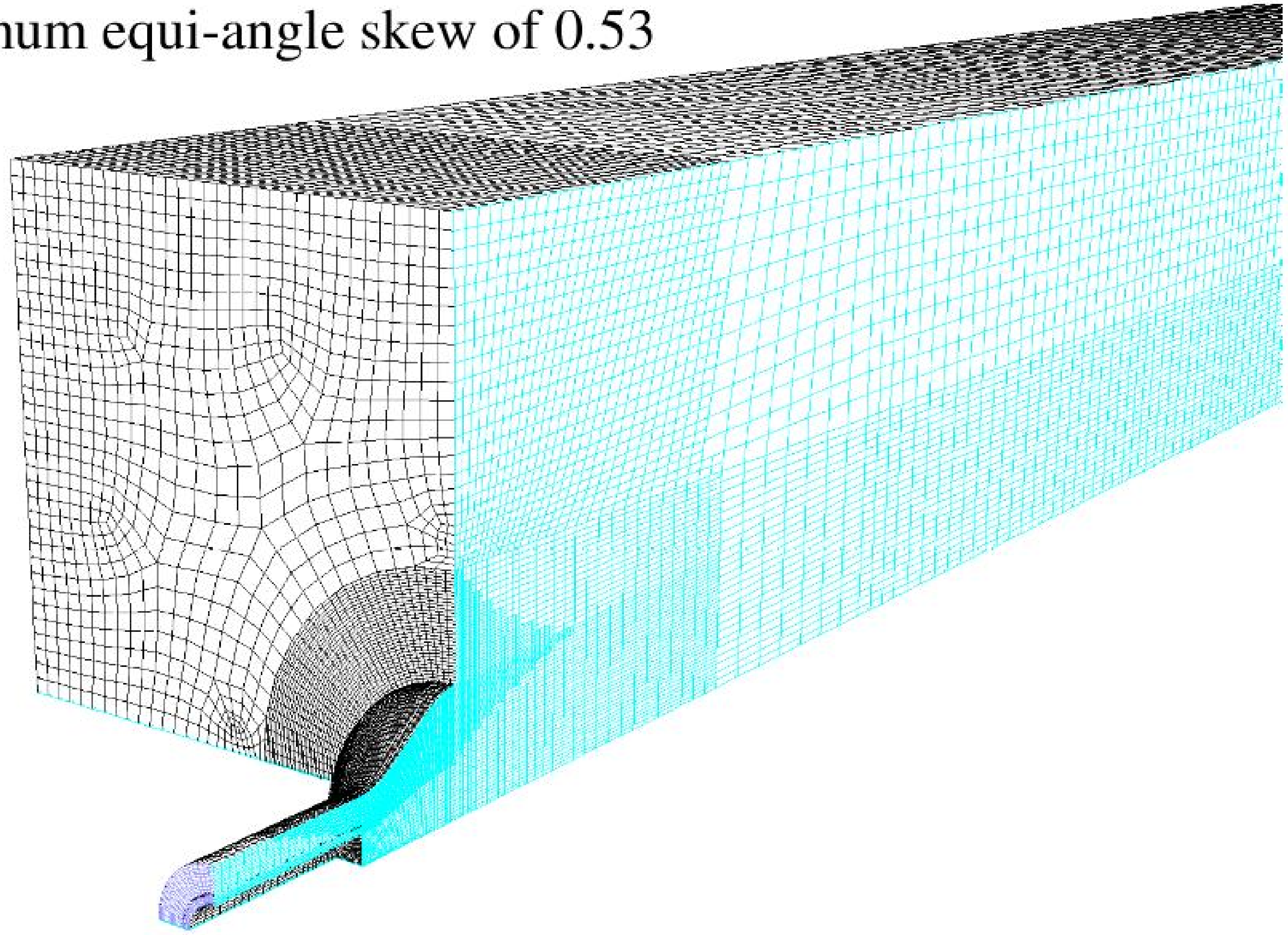

Turbulence modeling

- Standard $k-\varepsilon$ turbulence model, standard wall functions
  - not substantially sensitive to the turbulence model

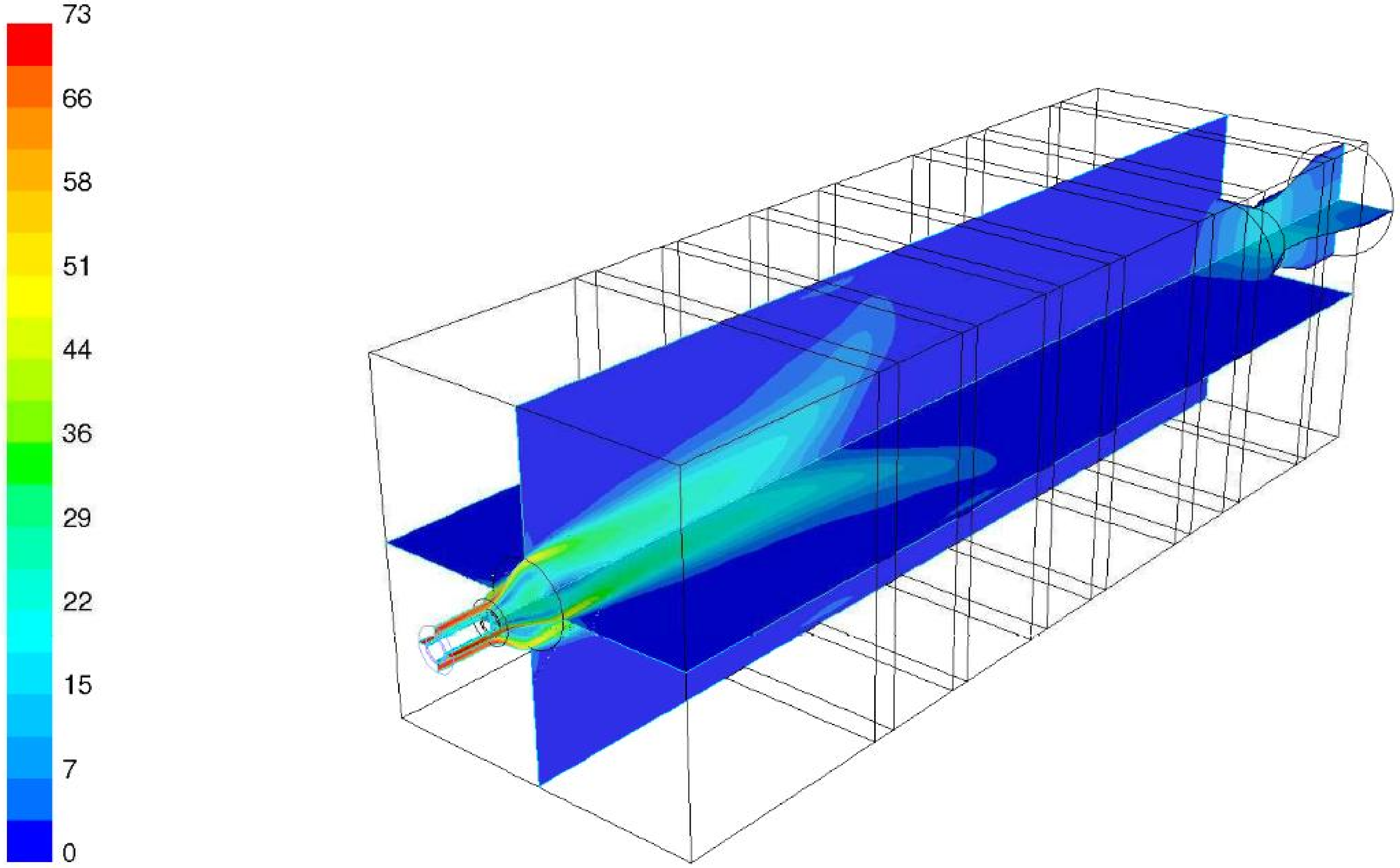

Mean velocity magnitude (*m/s*)

Gas phase combustion modeling (1)

- Eddy Dissipation (Magnussen) model [parameters from Ref. 1]
  - two step reaction

$$VOL + 2.46O_2 \longrightarrow 2.17CO + 0.633CO_2 + 2.118H_2O + 0.071N_2$$

$$CO + 0.5O_2 \longrightarrow CO_2$$

  - model constants $A = 0.6$, $B = 10^{20}$ (standard $A = 4$, $B=0.5$)
  - Adjusted specific heat's *(SI units)*

$$c_p(T) = \sum_i c_i \cdot T^i$$

Species	c_0	c_1	c_2	c_3	c_4	c_5	c_6
N_2	1.027e3	2.162e-2	1.486e-4	-4.484e-8			
CH_4	2.005e3	-6.814e-1	7.086e-3	-4.714e-6	8.513e-10		
CO	1.047e3	-1.568e-1	5.399e-4	-3.011e-7	5.050e-11		
H_2	1.415e4	1.737e-1	6.900e-4				
CO_2	5.354e2	1.279	-5.468e-4	-2.382e-7	1.892e-10		
H_2O	1.938e3	-1.181	3.644e-3	-2.863e-6	7.596e-10		
O_2	8.763e2	1.228e-1	5.583e-4	-1.202e-6	1.147e-9	-5.124e-13	8.566e-17

FLUENT

Gas phase combustion modeling (2)

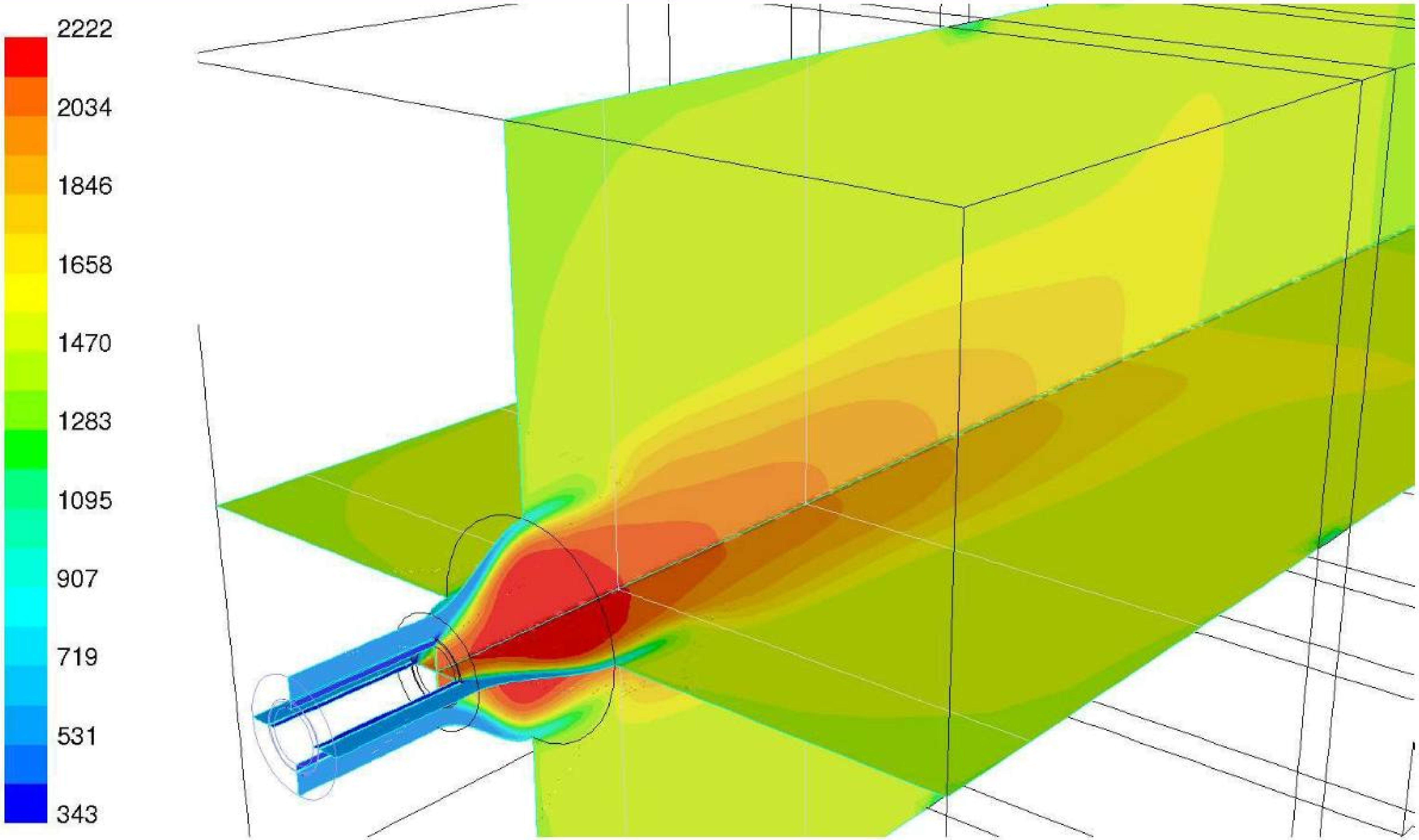

Mean temperature (K)

FLUENT

Gas phase combustion modeling (3)

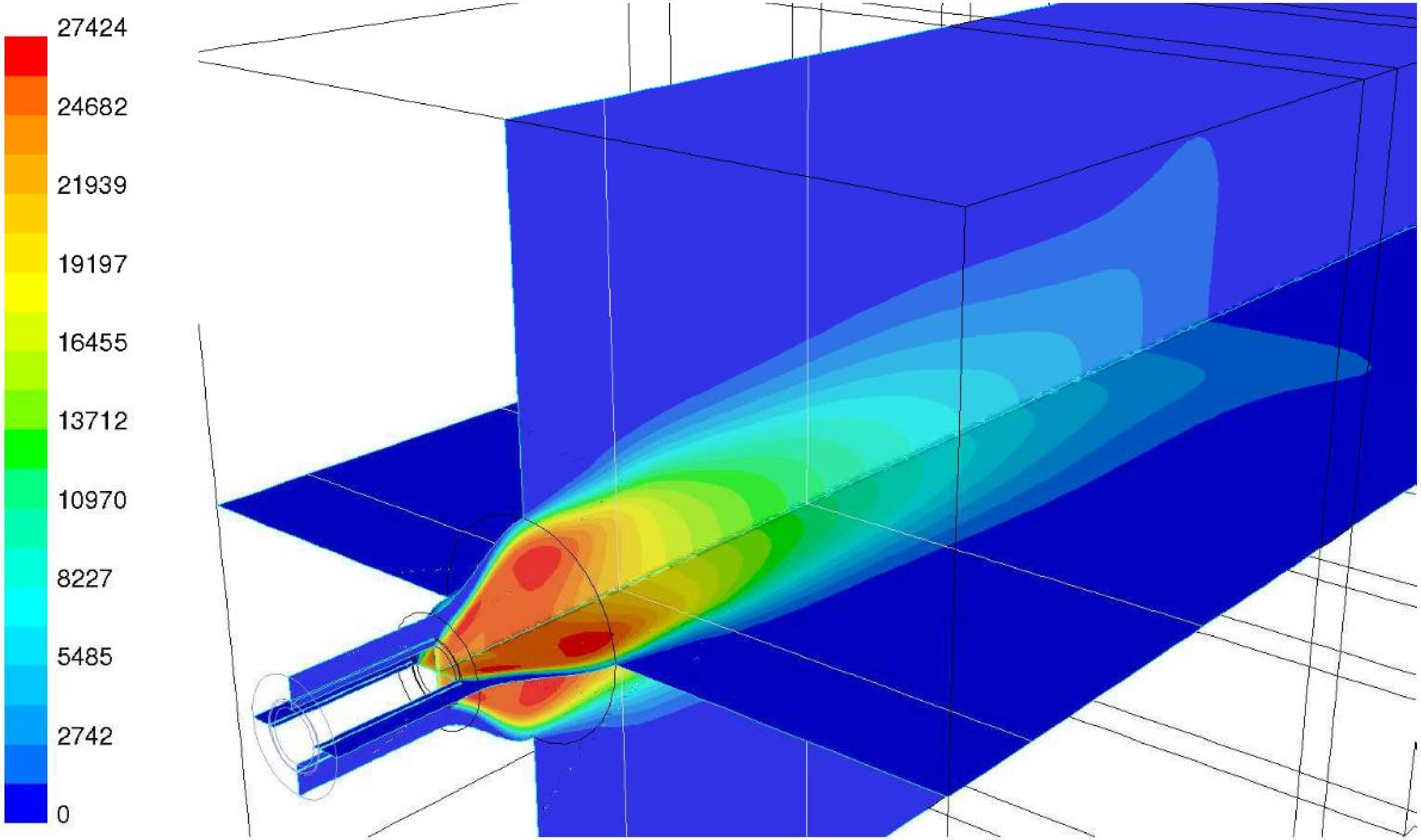

Mean *CO ppm*, dry

Discrete phase modeling (1)

- Gottelborn hvBb coal
  - proximate (weight %, dry), *volatiles 55.0, fixed carbon 36.7, ash 8.3*
  - ultimate (weight %, daf) *C 80.36, H 5.08, N 1.45, S 0.94, O 12.17*
  - Lower Calorific Value (LCV, *MJ/kg* daf) *volatiles 32.3, char 32.9*
- Rosin-Rammler size distribution
  - smallest $1\mu m$, largest $300\mu m$, mean $45\mu m$, spread *1.36*
- Single rate devolatization model,
  - $A=2*10^5\ s^{-1}$, $E=7.4*10^7\ J/kmol$
- Kinetics/diffusion-limited surface (char) combustion
  - O_2 diffusion rate const = $5*10^{-12}\ kg/m^2sPa$, $A=6.7\ kg/m^2sPa^{0.5}$, $E=1.14*10^8\ J/kmol$
- Discrete Random Walk (DRW) model
  - 21600 tracks per DPM iteration, 10 particle sizes
  - 25 gas phase iterations per DPM iteration

FLUENT

Discrete phase modeling (2)

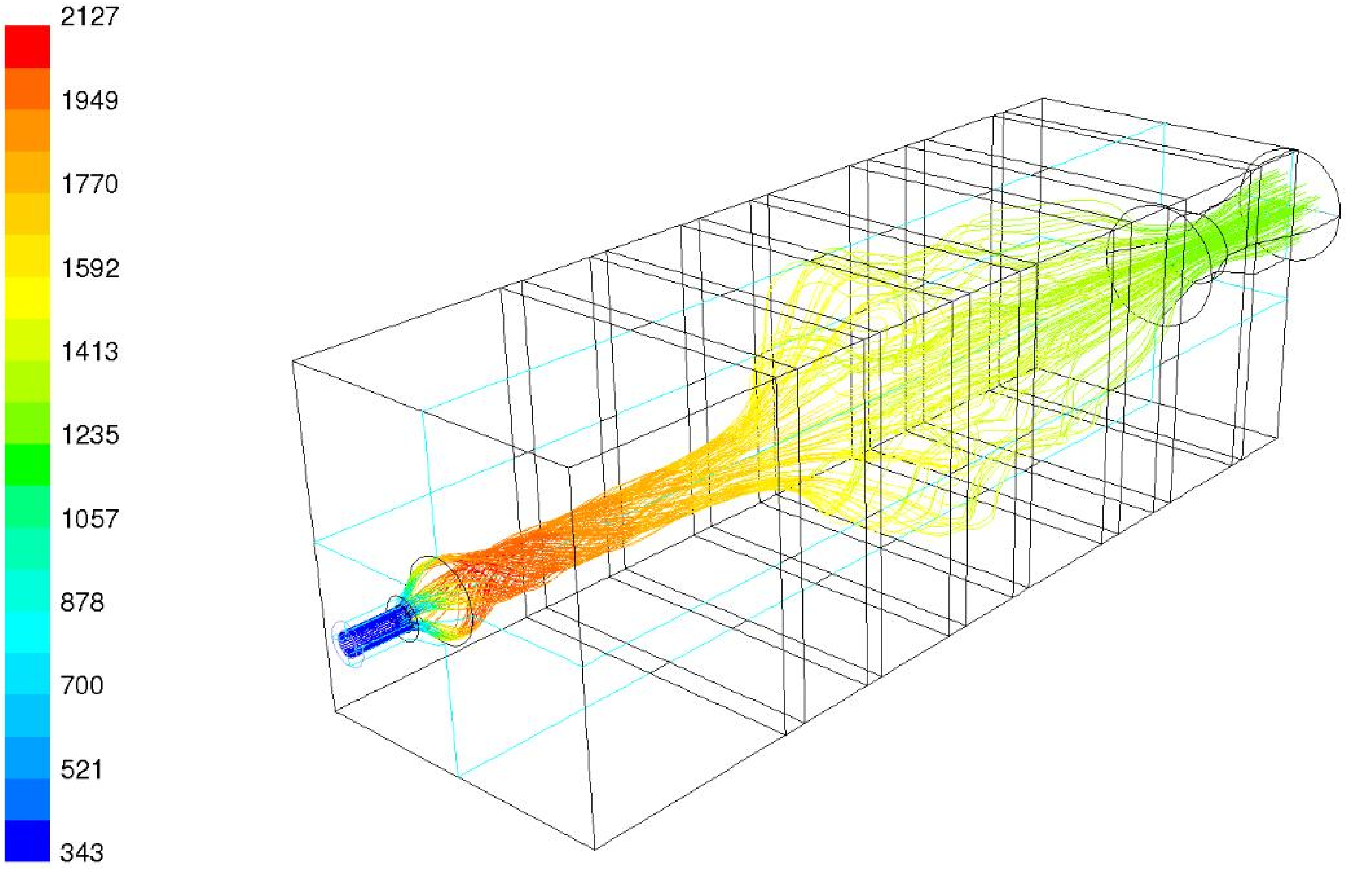

Tracks of *1 μm* particles, colored by particle temperature (*K*)

Radiation modeling

- *P-1* radiation model (optical thickness > 1)
  - *WSGGM* for absorption co-efficient

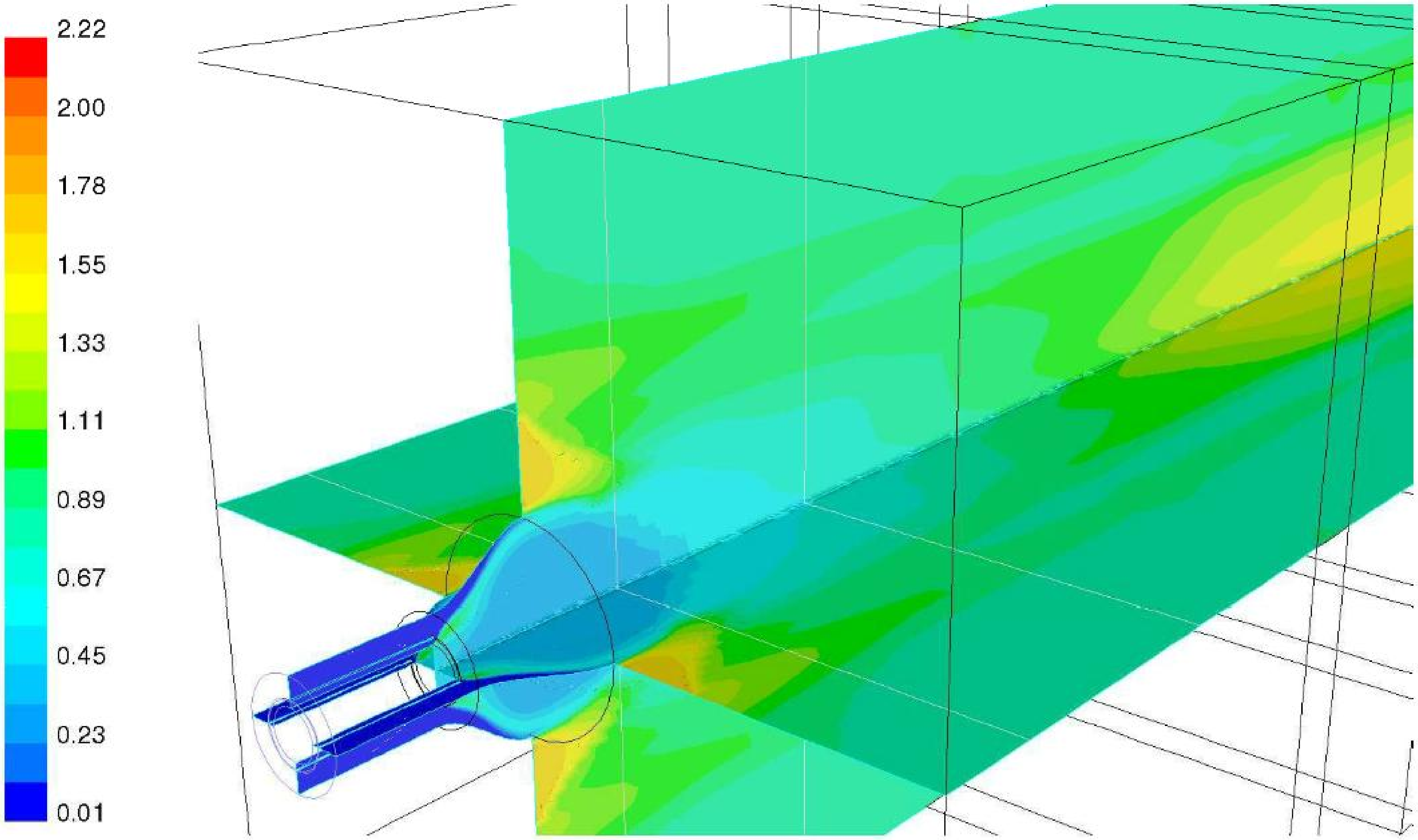

Absorption co-efficient (m^{-1})

NOx modeling

- Thermal and fuel *NOx*
- *[O]* from partial equilibrium assumption
- Post-processed: assumed shape β pdf

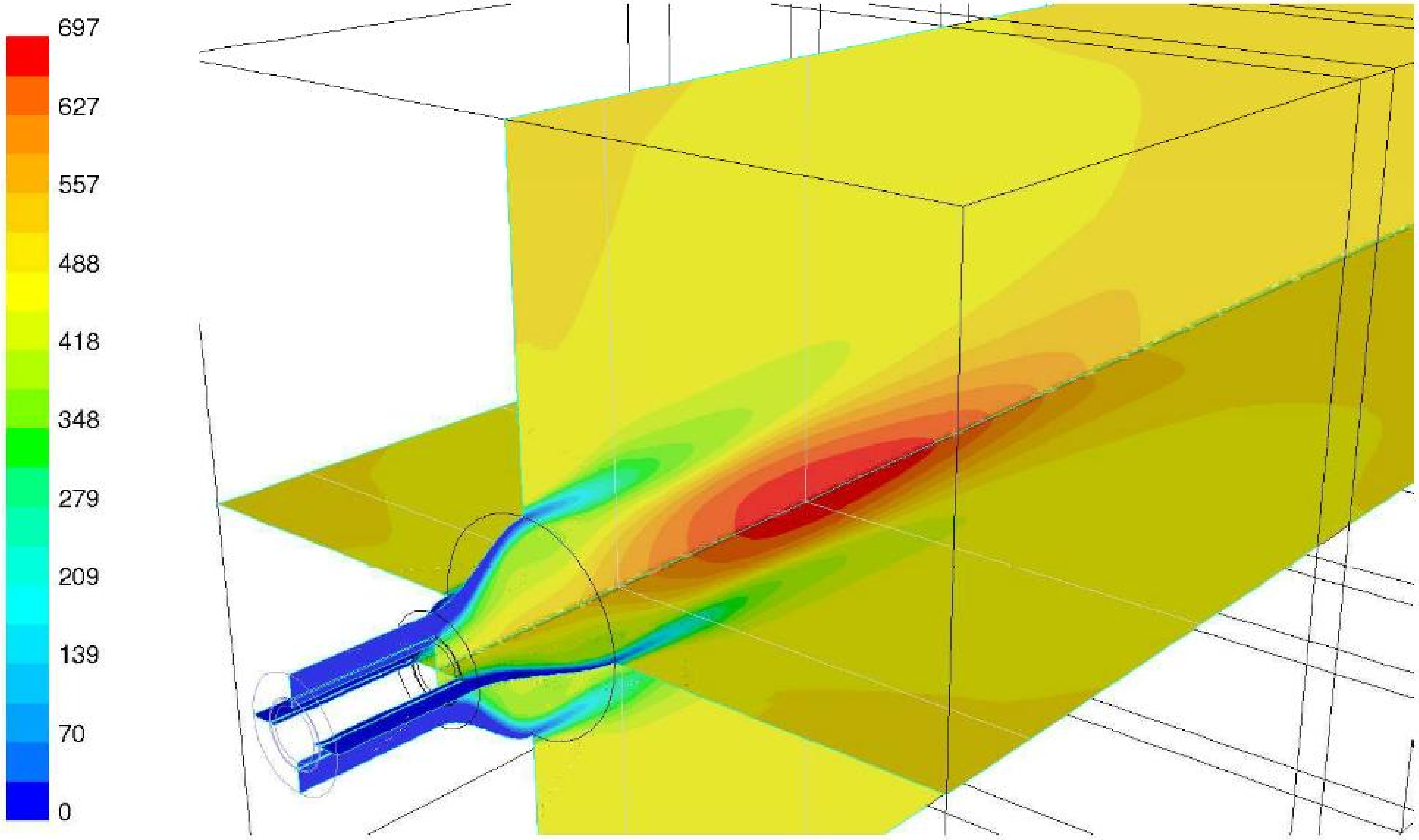

Mean *NO ppm*, dry

Results (1) Velocity field

Mean axial velocity (m/s) Mean swirl velocity (m/s)

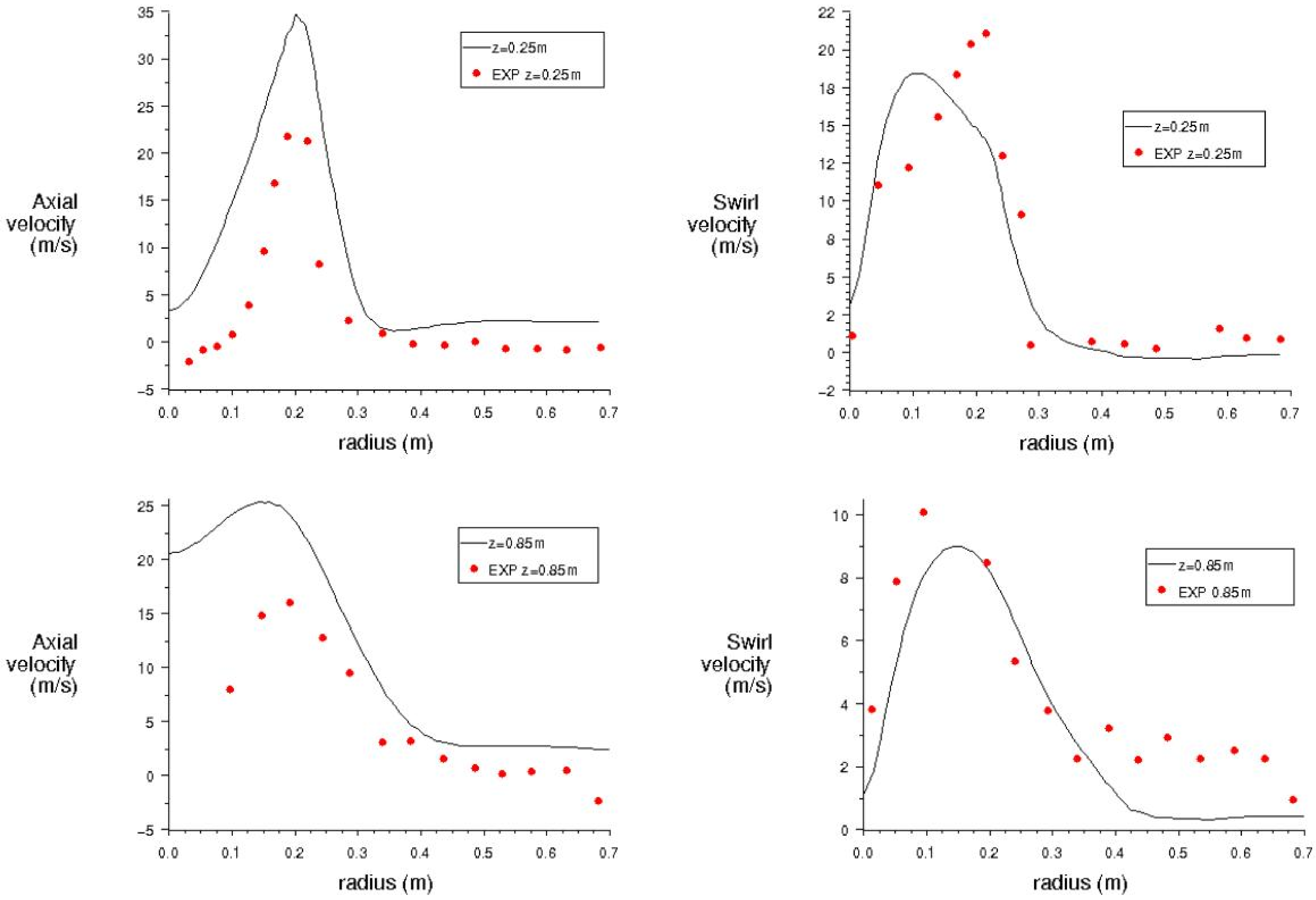

Results (2) Turbulence field

Turbulence intensity (m/s), $u' = \sqrt{3/2\,\tilde{k}}$

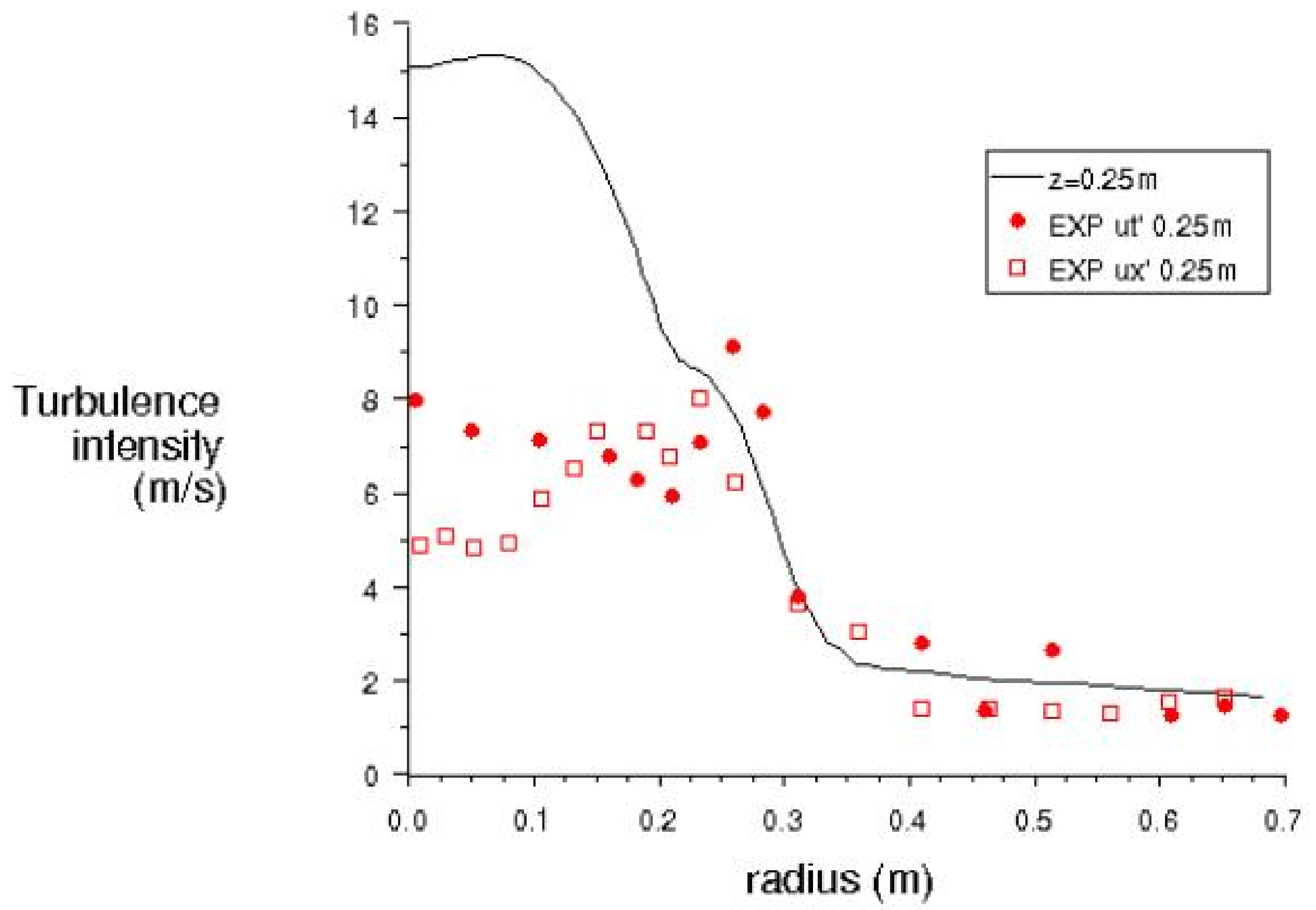

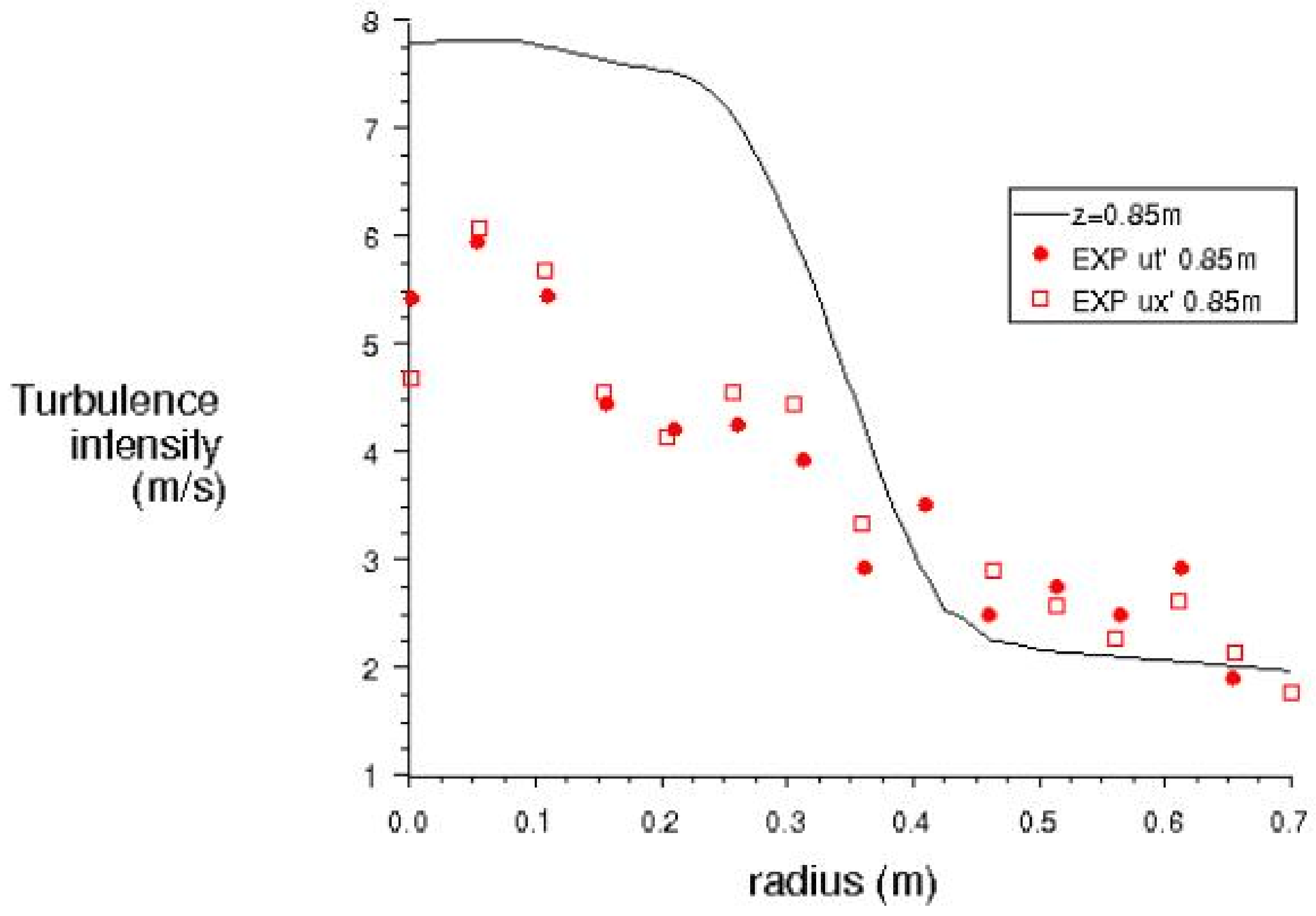

Results (3) Temperature/species field

Mean temperature (K)

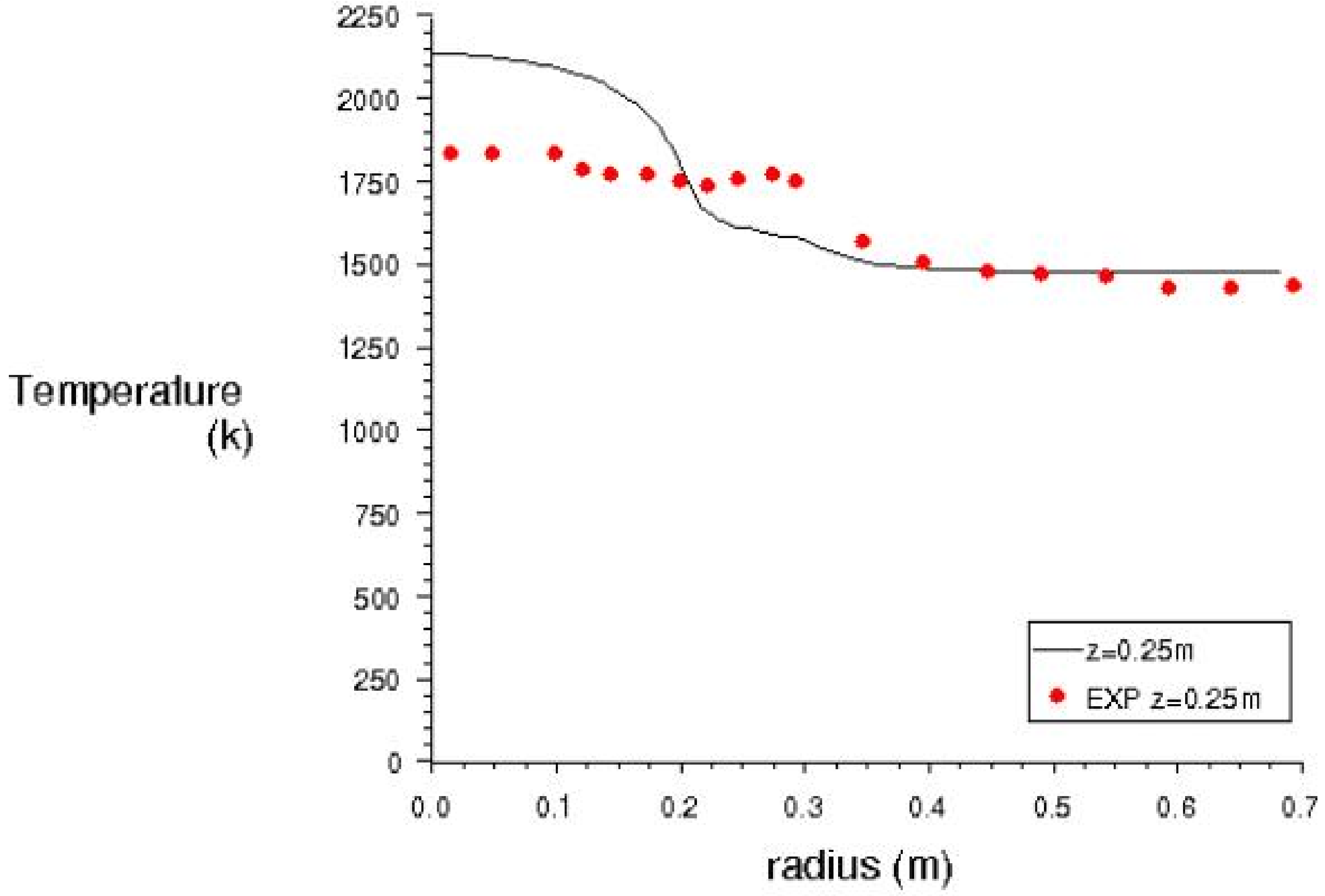

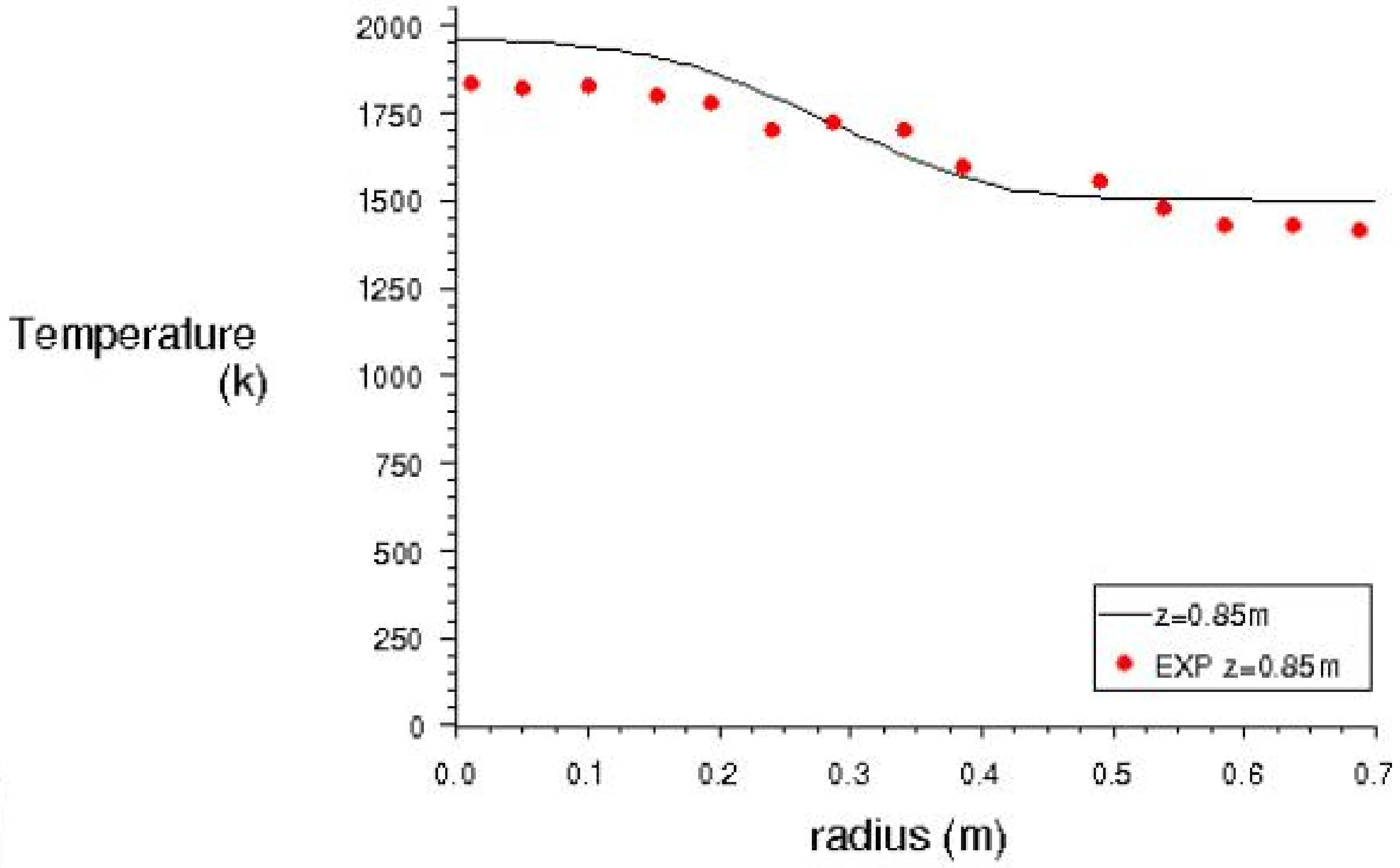

Mean O_2 (volume %, dry)

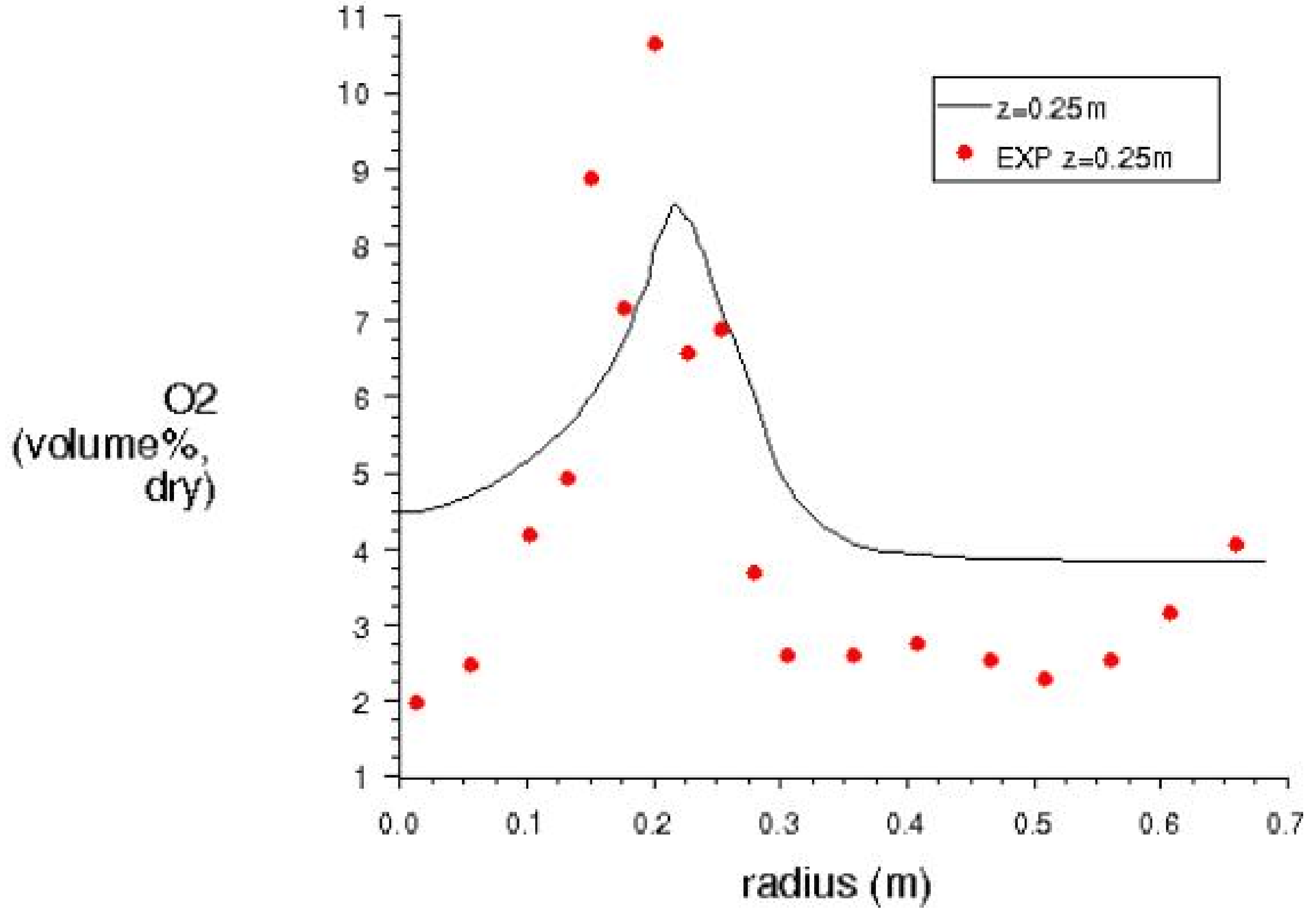

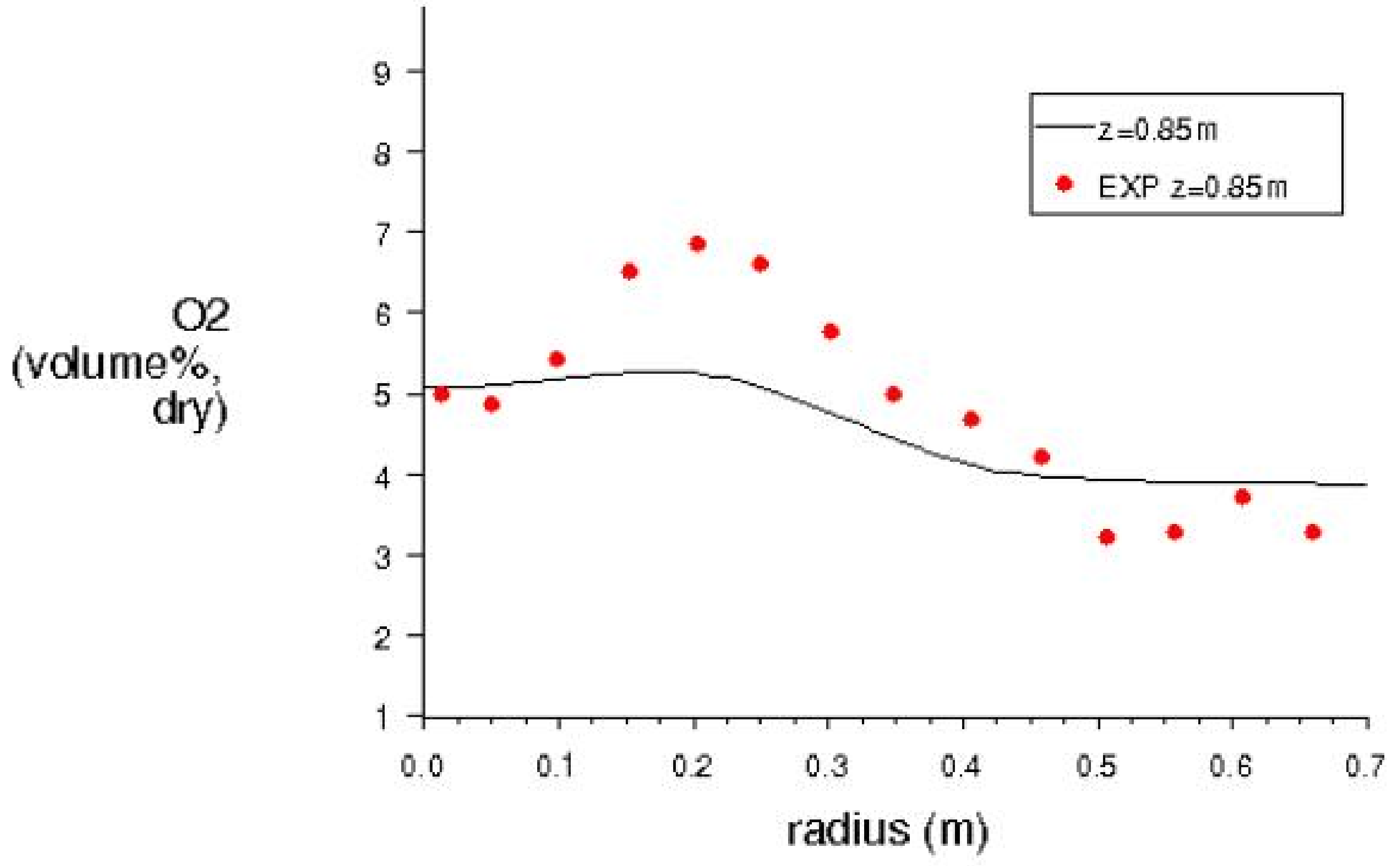

Results (4) Species field

Mean CO_2 (volume %, dry) | Mean CO (ppm, dry)

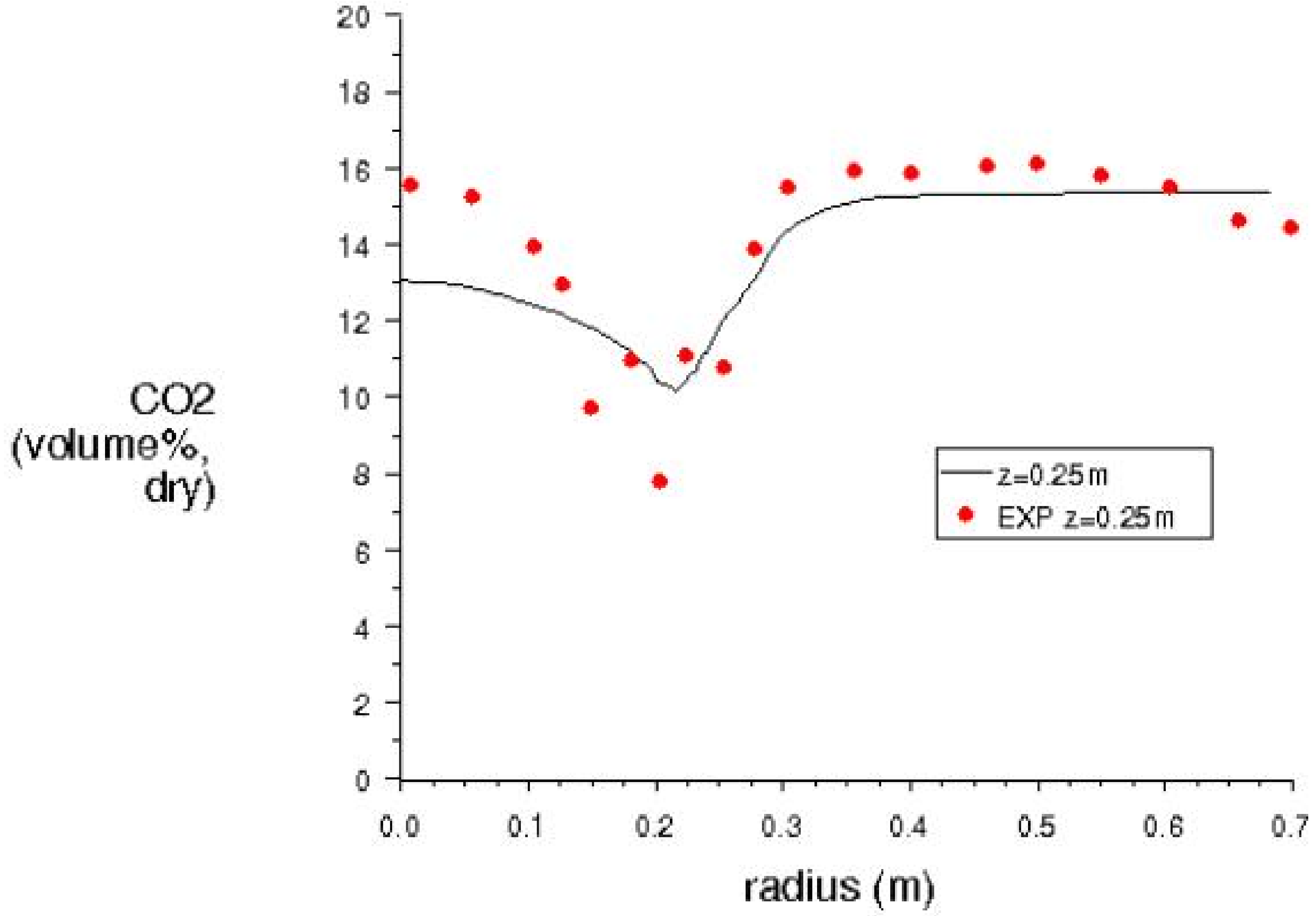

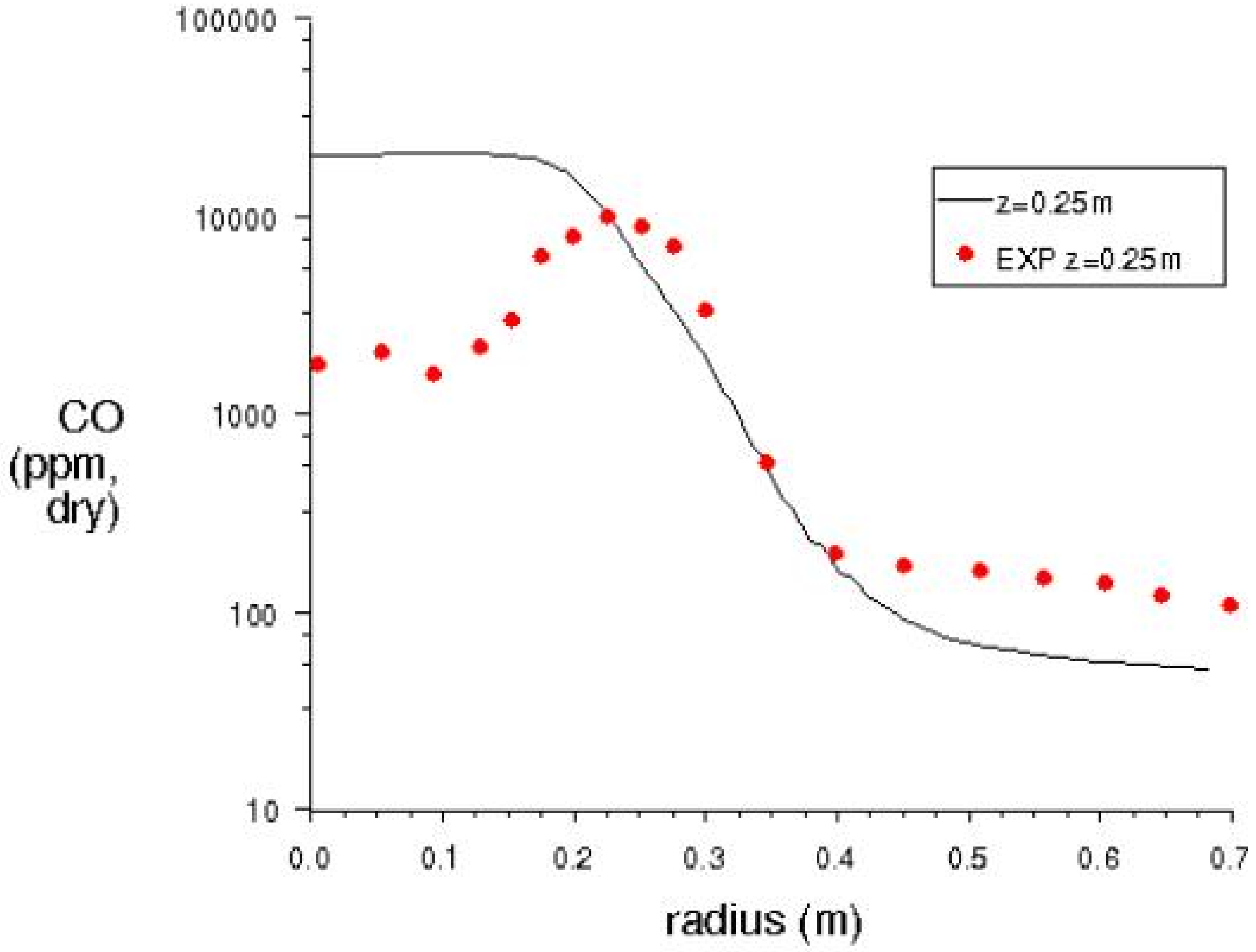

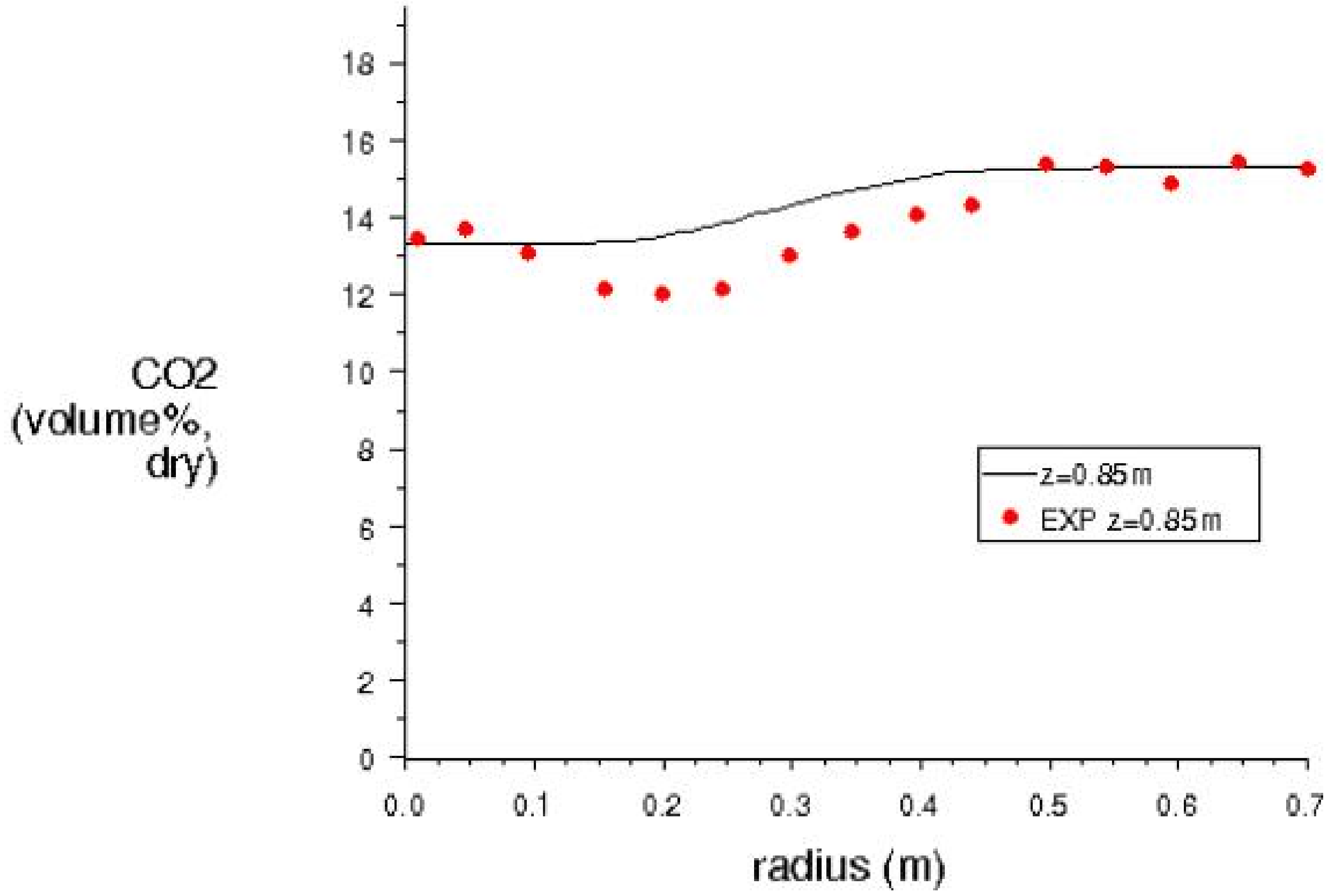

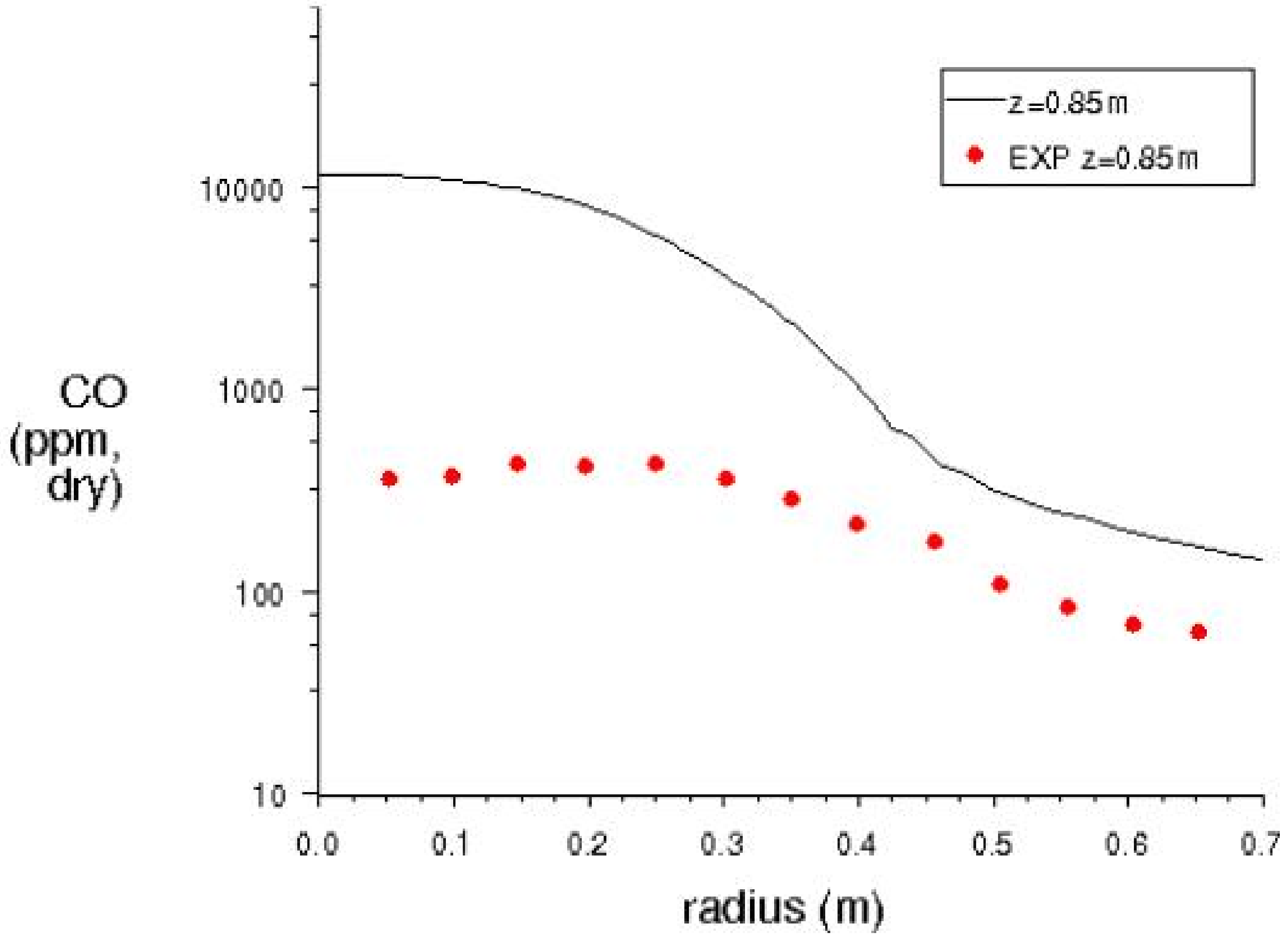

Results (5) Velocity field

Mean NO (ppm, dry)

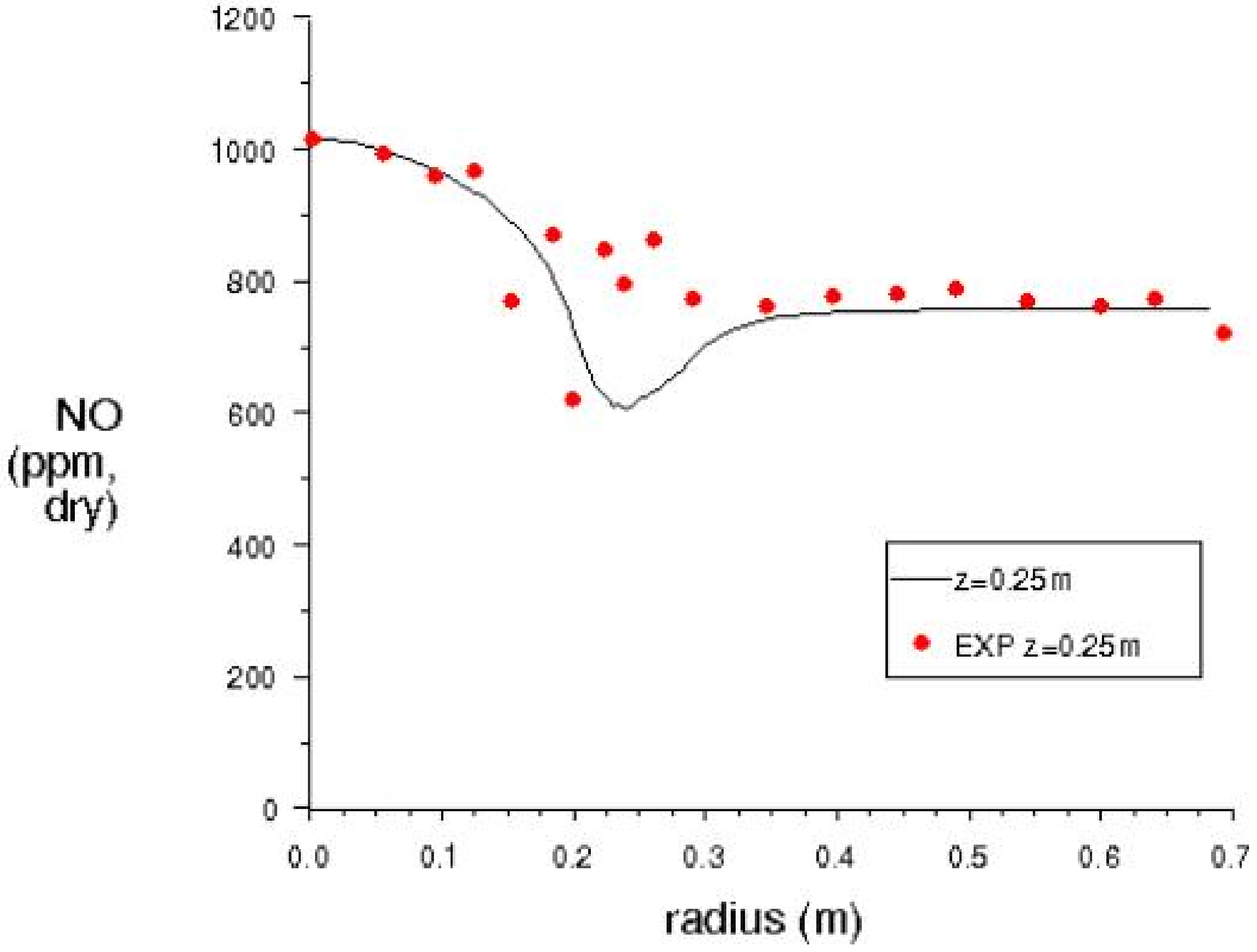

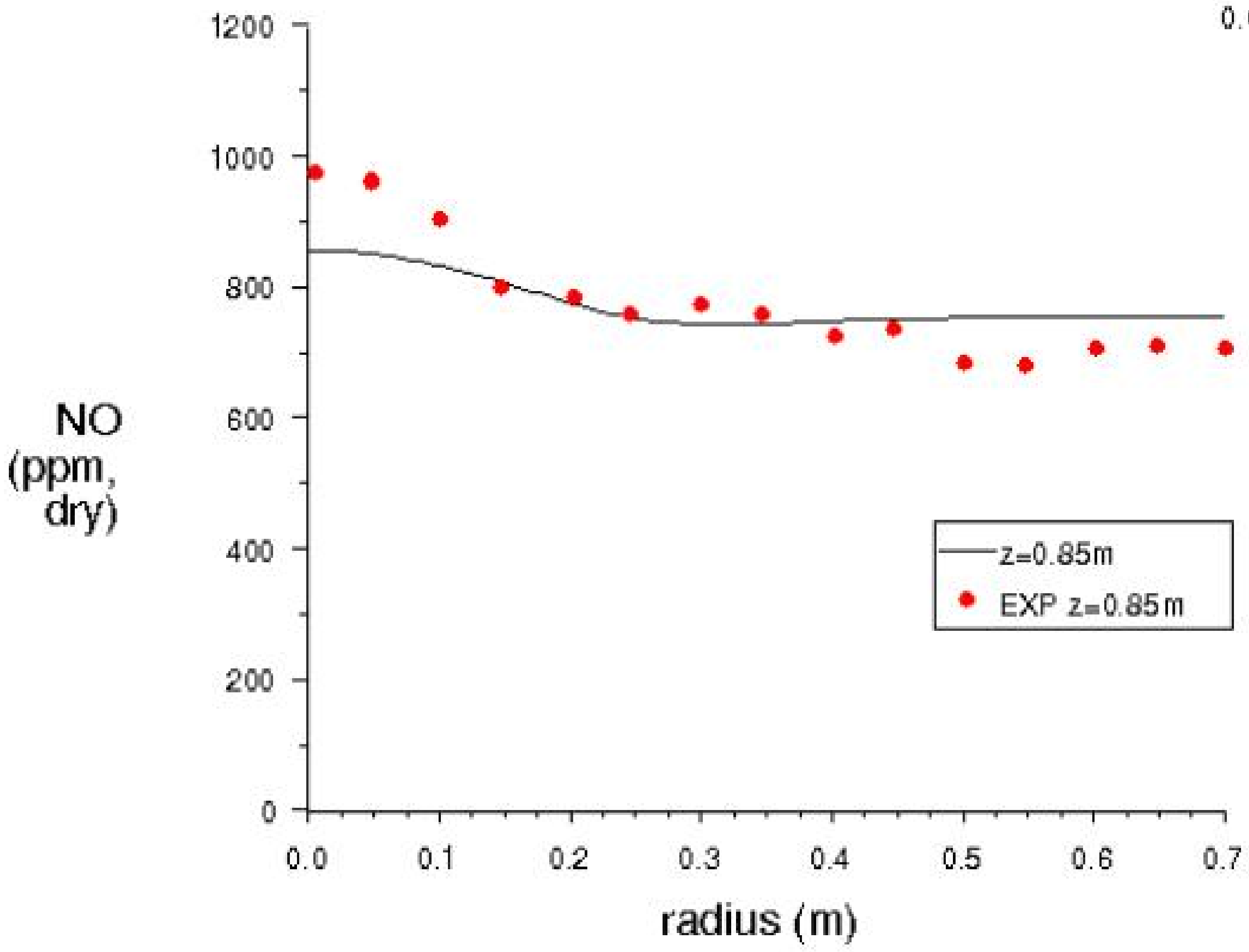

Solution strategy

- 13 equations solved:
  - 1 pressure, 3 momentum, 1 energy, 2 turbulence, 1 radiation, 5 gas phase species, (2 pollutants post-processed)
- Segregated, pressure based solver
- Solution procedure:
  - a. coarse grid, cold flow solution
  - b. gas phase combustion
  - c. particles
  - d. radiation
  - e. adaption
- Second order upwind discretization

FLUENT

Case 2: GE LM-1600 gas turbine combustor

- courtesy of *Nova Research and Technology Corp.*, Calgary, Canada
- non-premixed, natural gas
- 12.8 *MW*, 19:1 pressure ratio (full load)
- annular combustion chamber, 18 nozzles

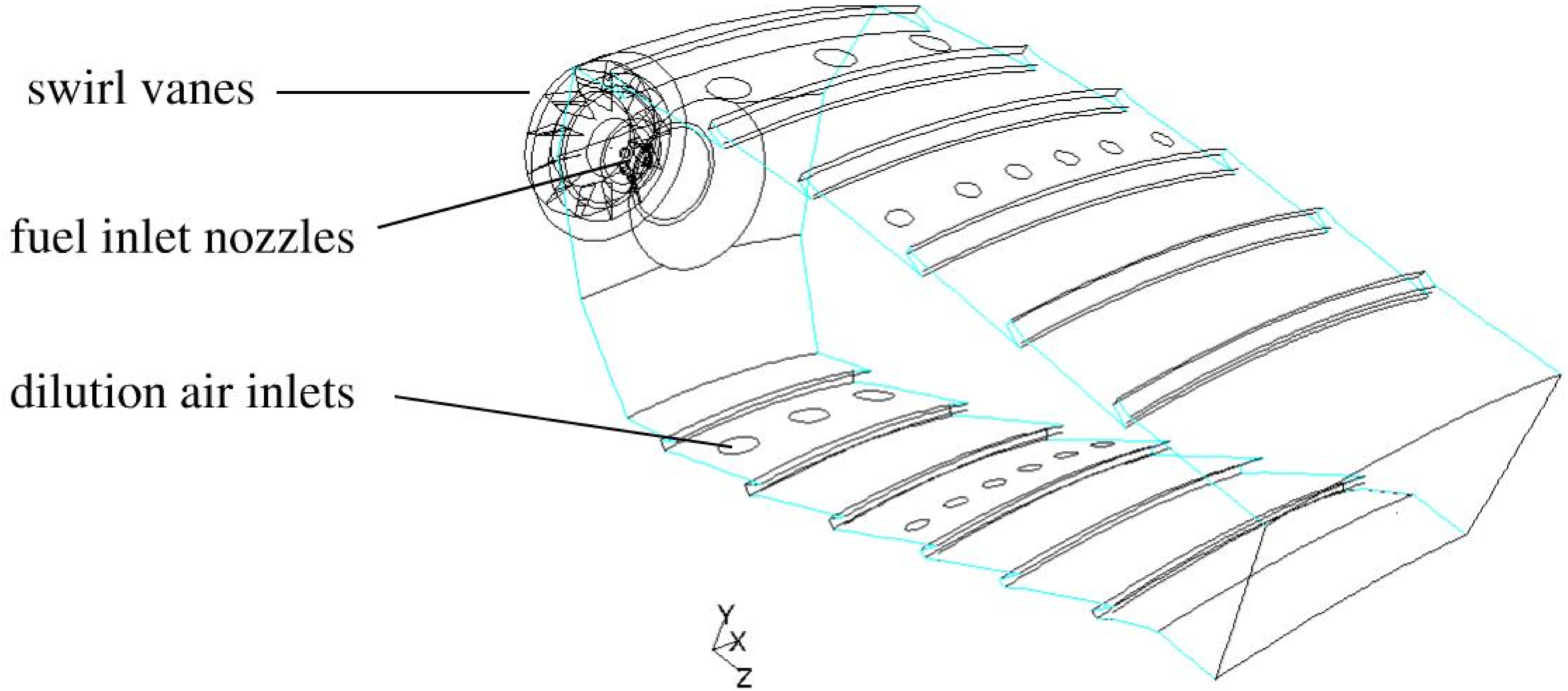

Grid

- 3D, 1/18*th* geometry model due to periodicity
- Multi-block hexahedral mesh
  - Maximum equi-angle skew of 0.84
  - 286k cells

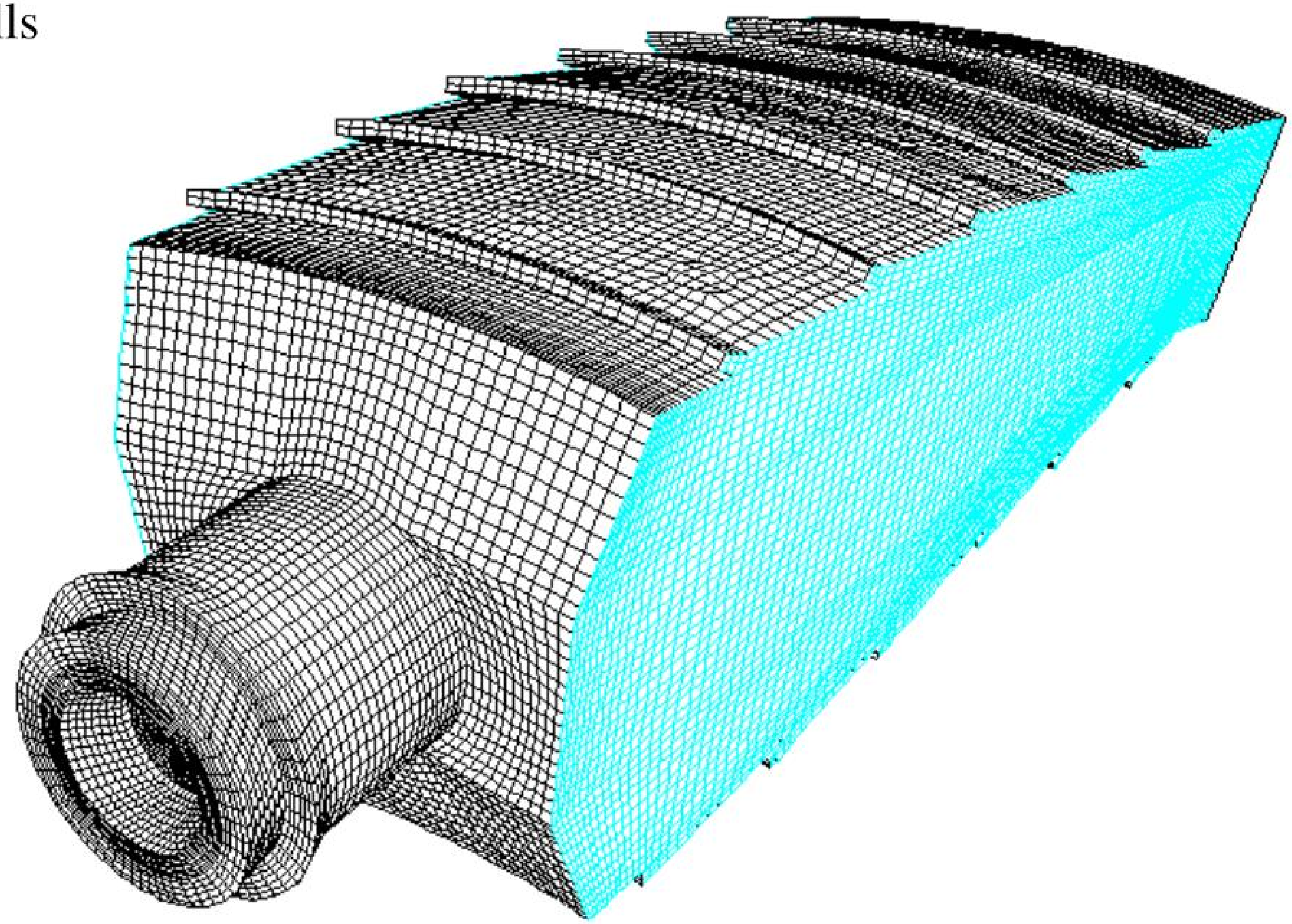

FLUENT

Turbulence modeling

- Standard $k{-}\varepsilon$ turbulence model

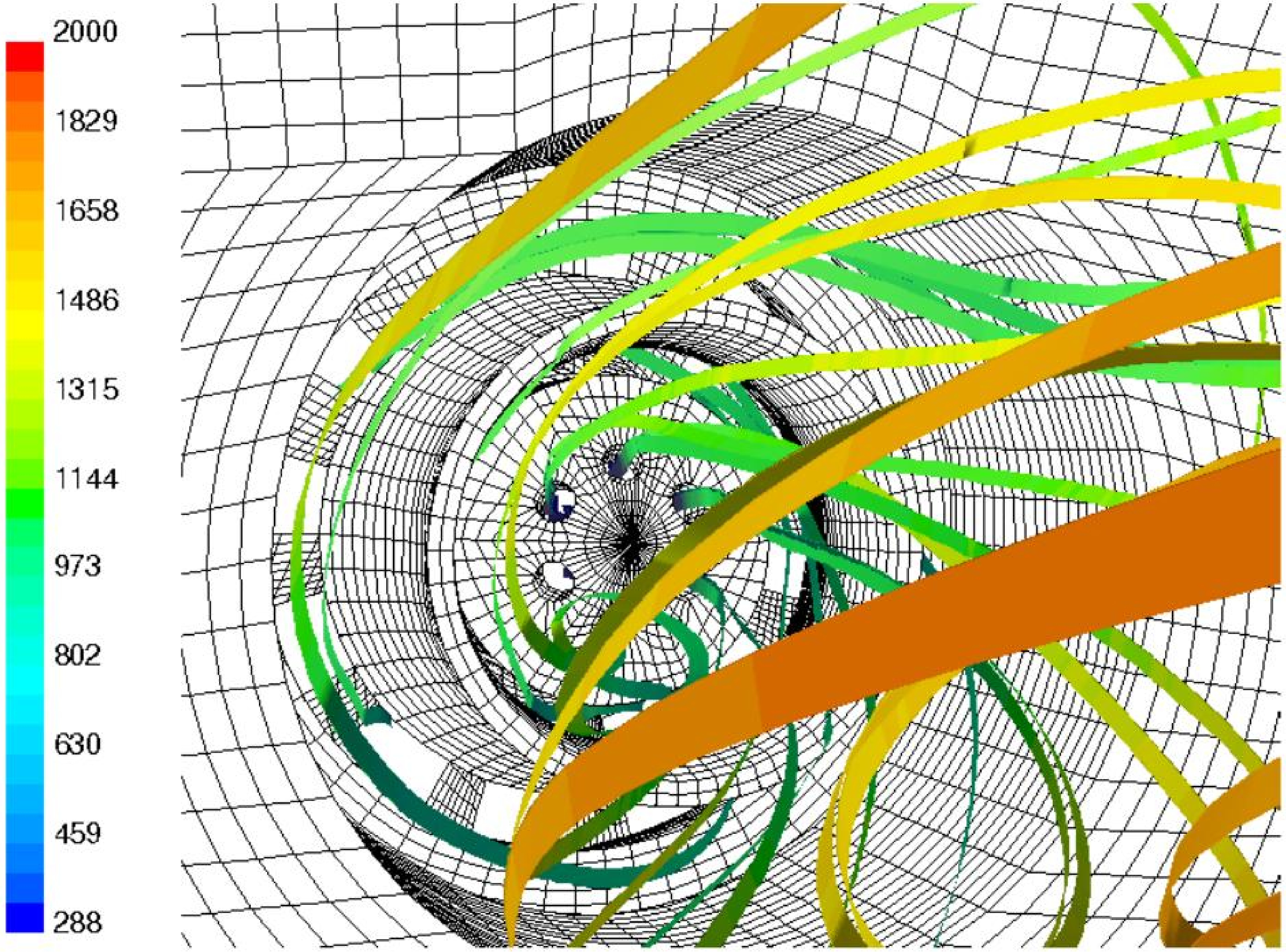

Path ribbons colored by temperature (K)

Gas phase combustion modeling (1)

- Laminar Flamelet model
  - 22 species, 104 reactions reduced GRI-MECH 1.22 mechanism
    A. Kazakov and M. Frenklach, *http://www.me.berkeley.edu/drm*
  - Flamelets solved in mixture fraction space
  - Differential diffusion (*Le* effects) included

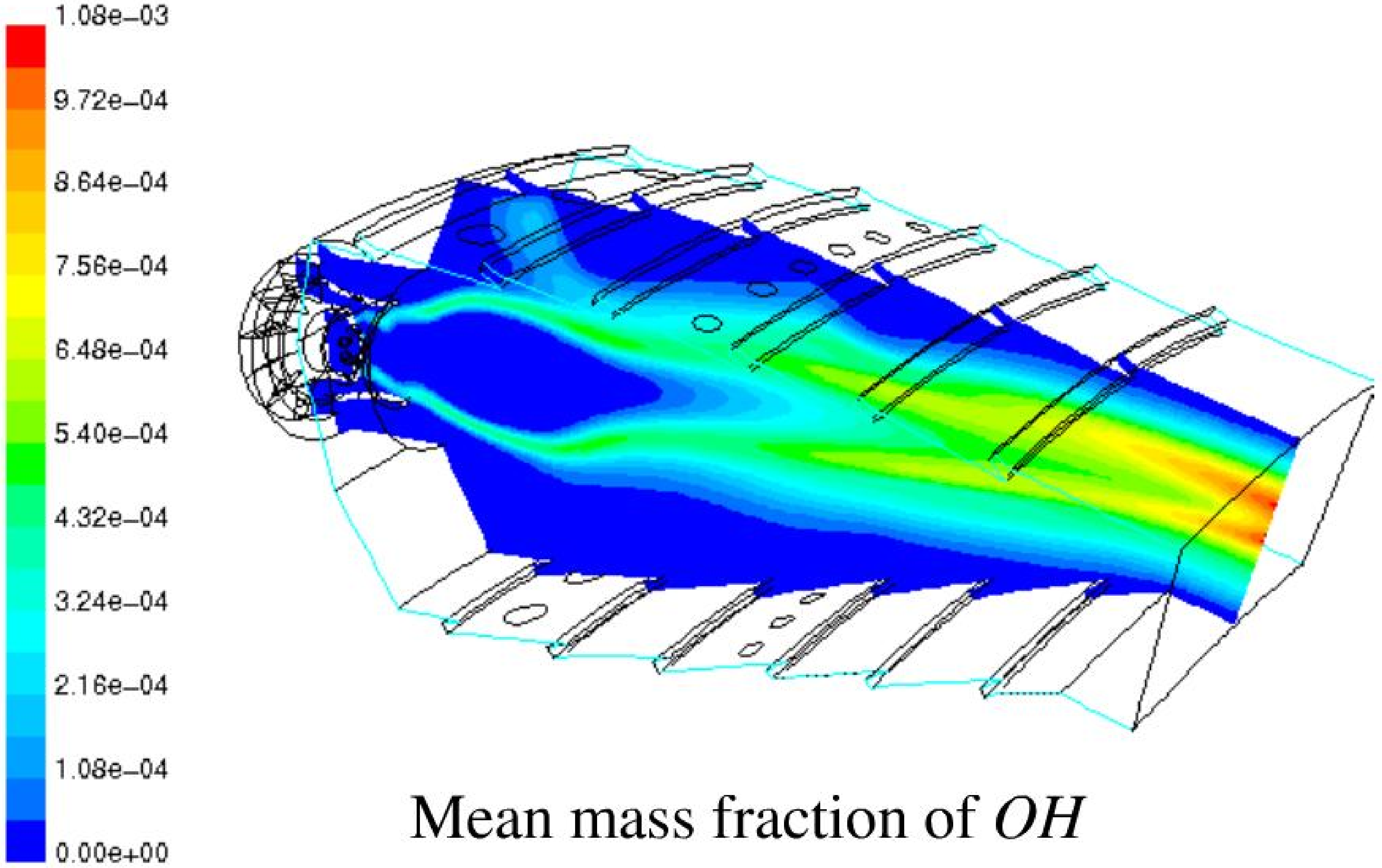

Mean mass fraction of *OH*

FLUENT

Gas phase combustion modeling (2)

- Deviation from chemical equilibrium measured by Damkohler no.

$$Da = \frac{turbulent\ time\ scale}{chemical\ time\ scale} = \frac{\tilde{k}/\tilde{\varepsilon}}{a_q^{-1}}$$

  - a_q is the laminar flamelet extinction strain rate = 11700 s^{-1}

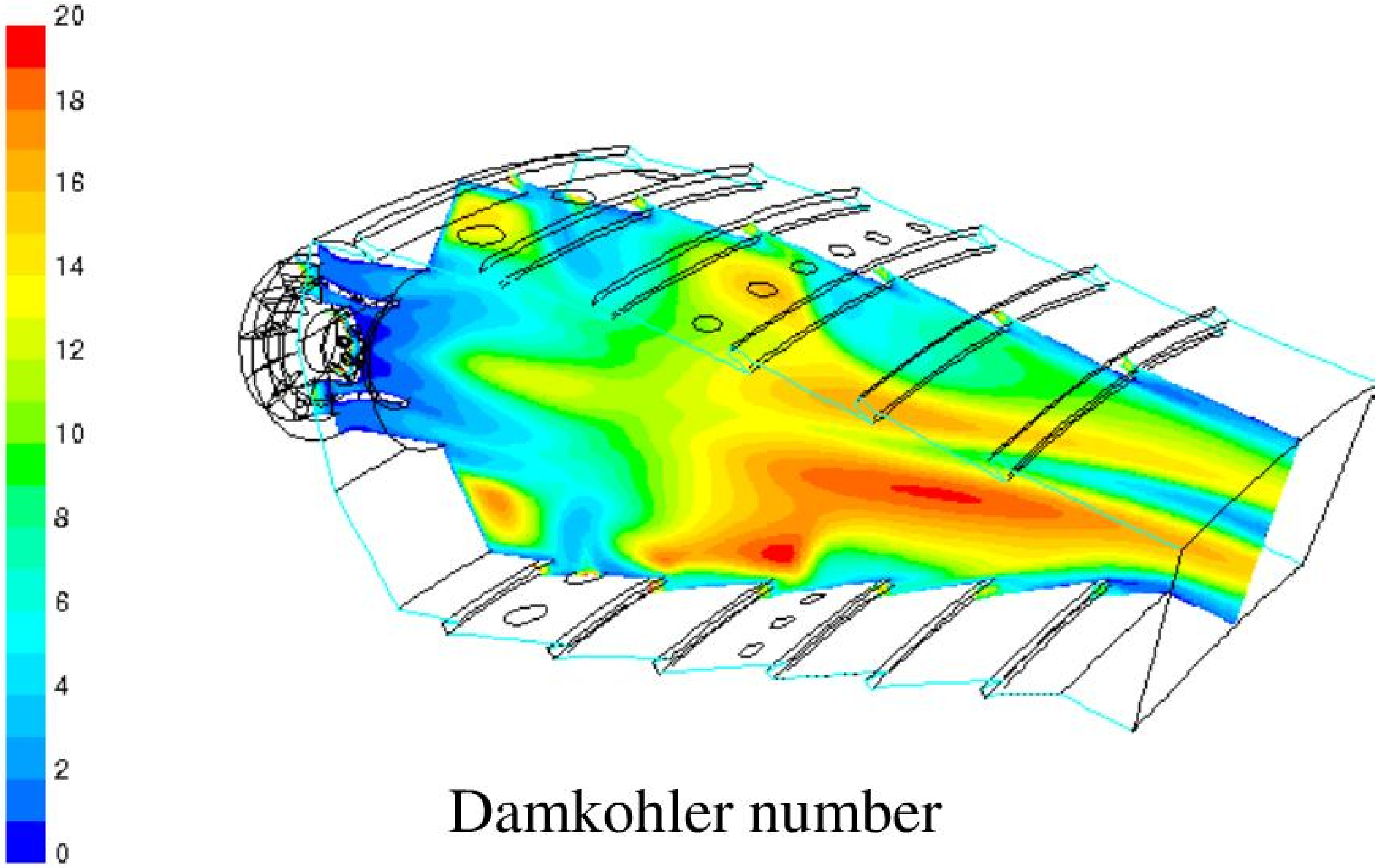

Damkohler number

Gas phase combustion modeling (3)

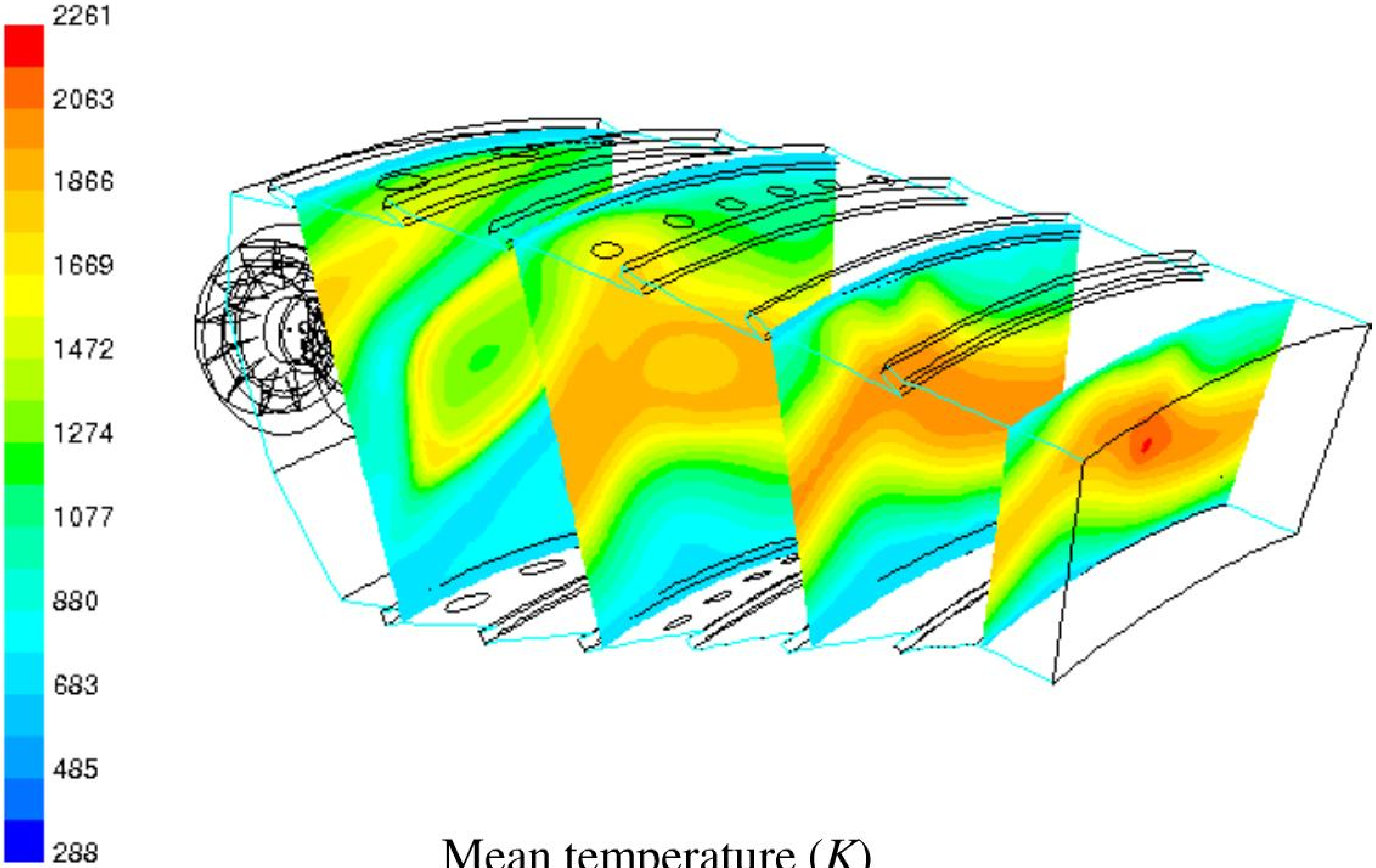

Mean temperature (*K*)

FLUENT

Gas phase combustion modeling (4)

Clipped contours of $\tilde{f}$, $\tilde{g}$ and $\tilde{\chi} = 2\tilde{g}\,\tilde{\varepsilon}/\tilde{k}$

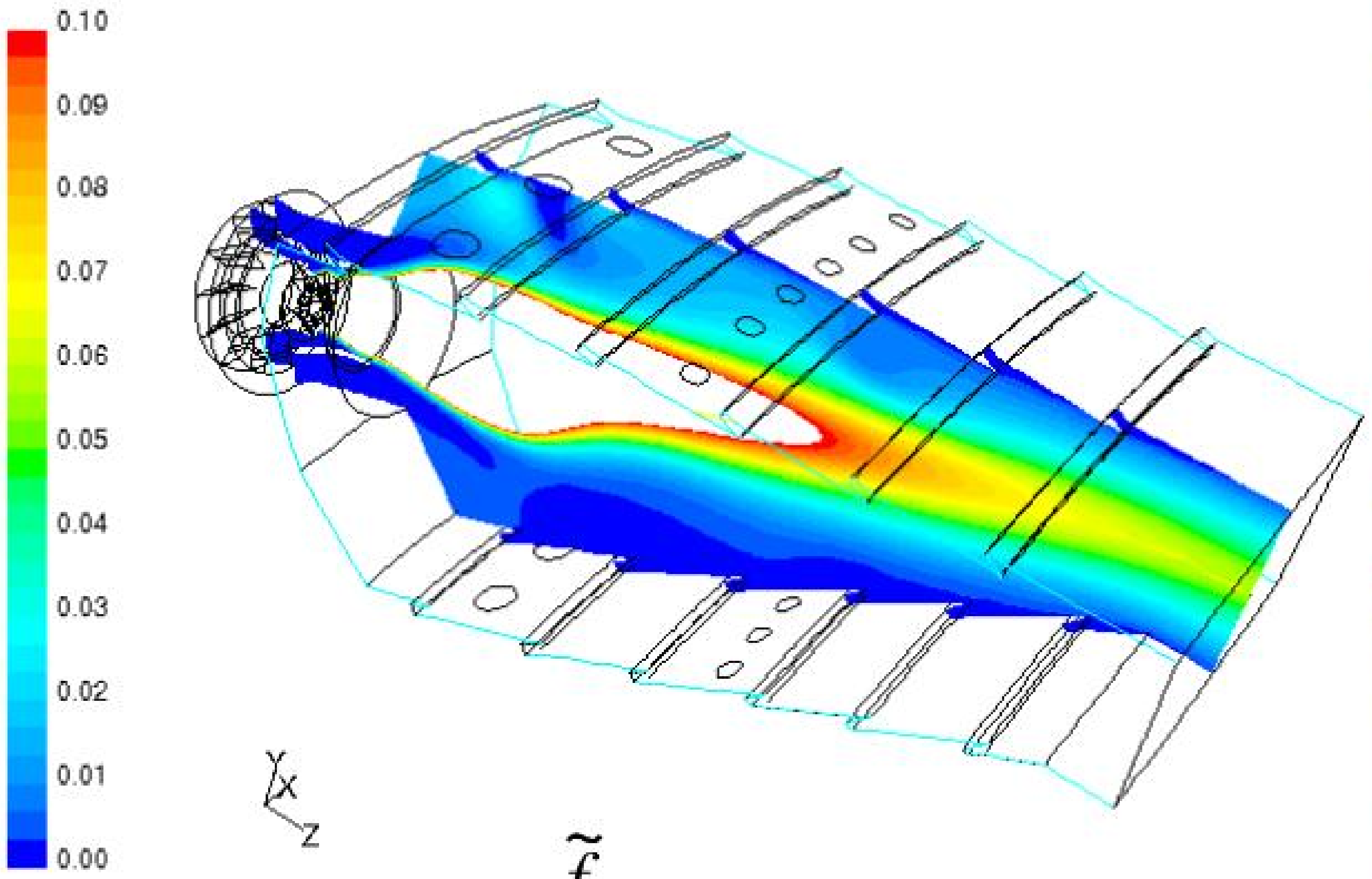

$\tilde{f}$

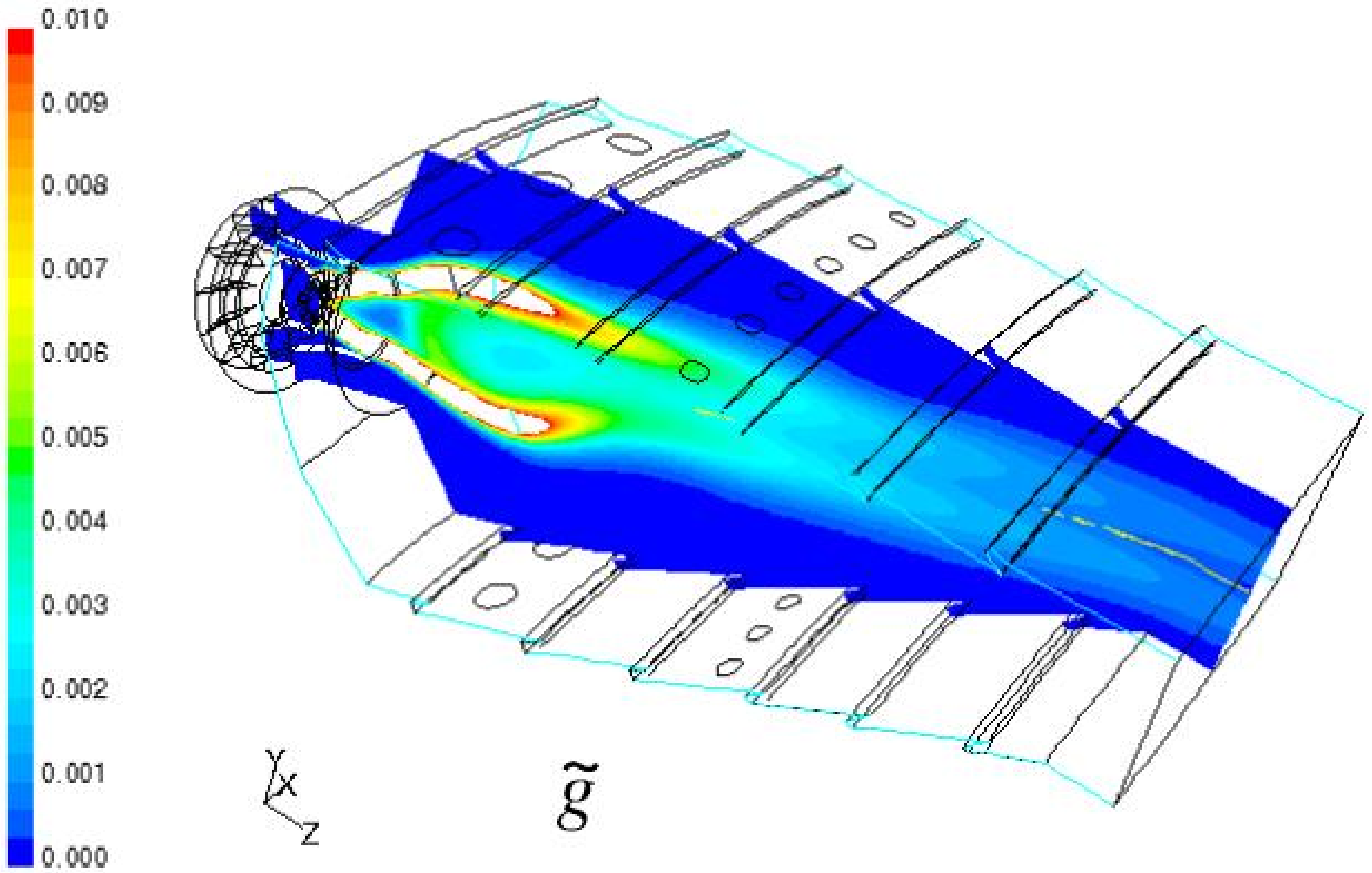

$\tilde{g}$

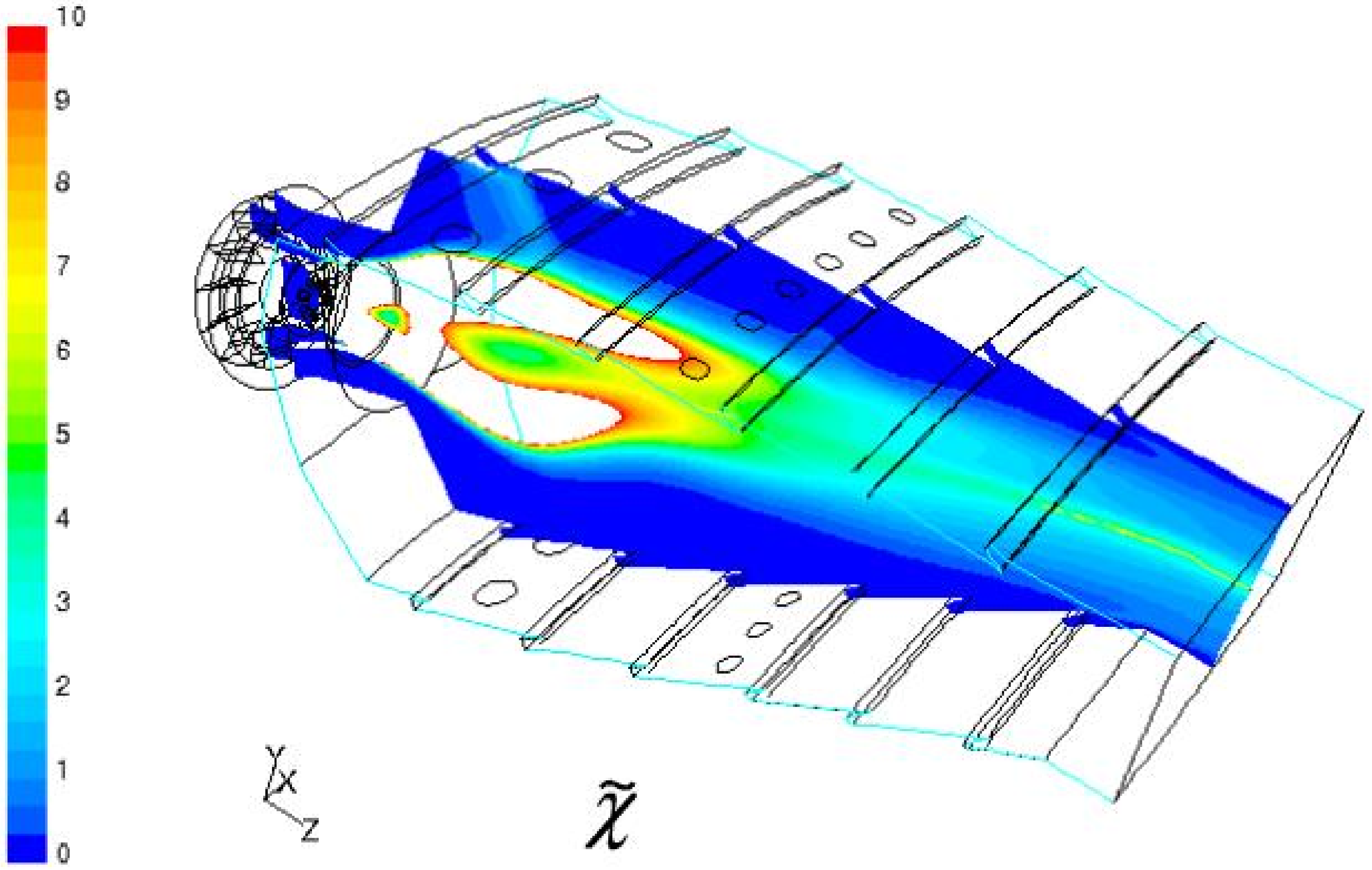

$\tilde{\chi}$

FLUENT

NOx modeling (1)

- Thermal and prompt *NOx:*
  - Zeldovich thermal *NO* dominant: $\dfrac{d[NO]}{dt} = 2k[O][N_2], \quad k = Ae^{-E/RT}$
- Species and temperature from Laminar Flamelet model
- Post-processed: assumed shape β pdf

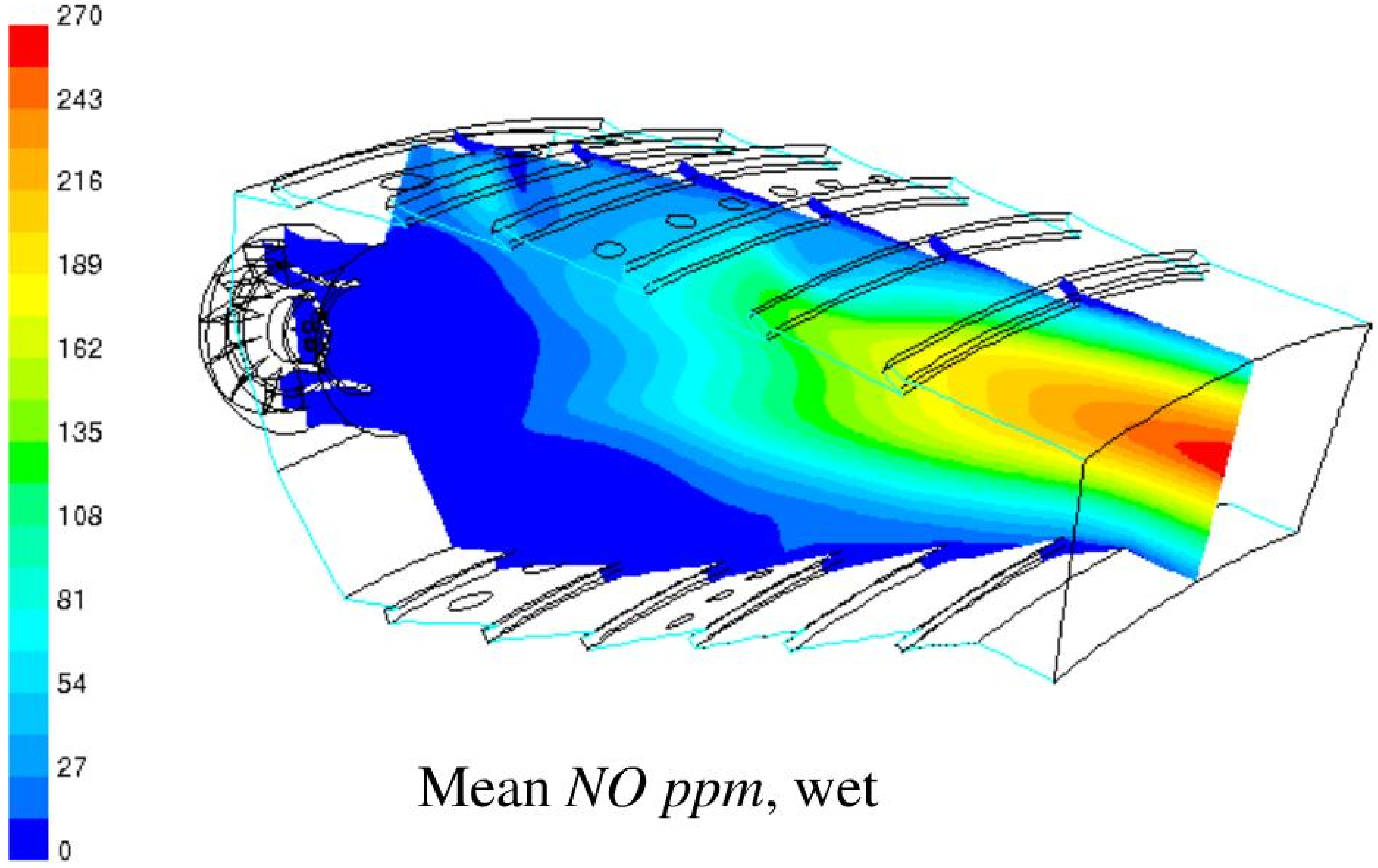

Mean *NO ppm*, wet

NOx modeling (2)

Laminar Flamelet model | Equilibrium *f* model

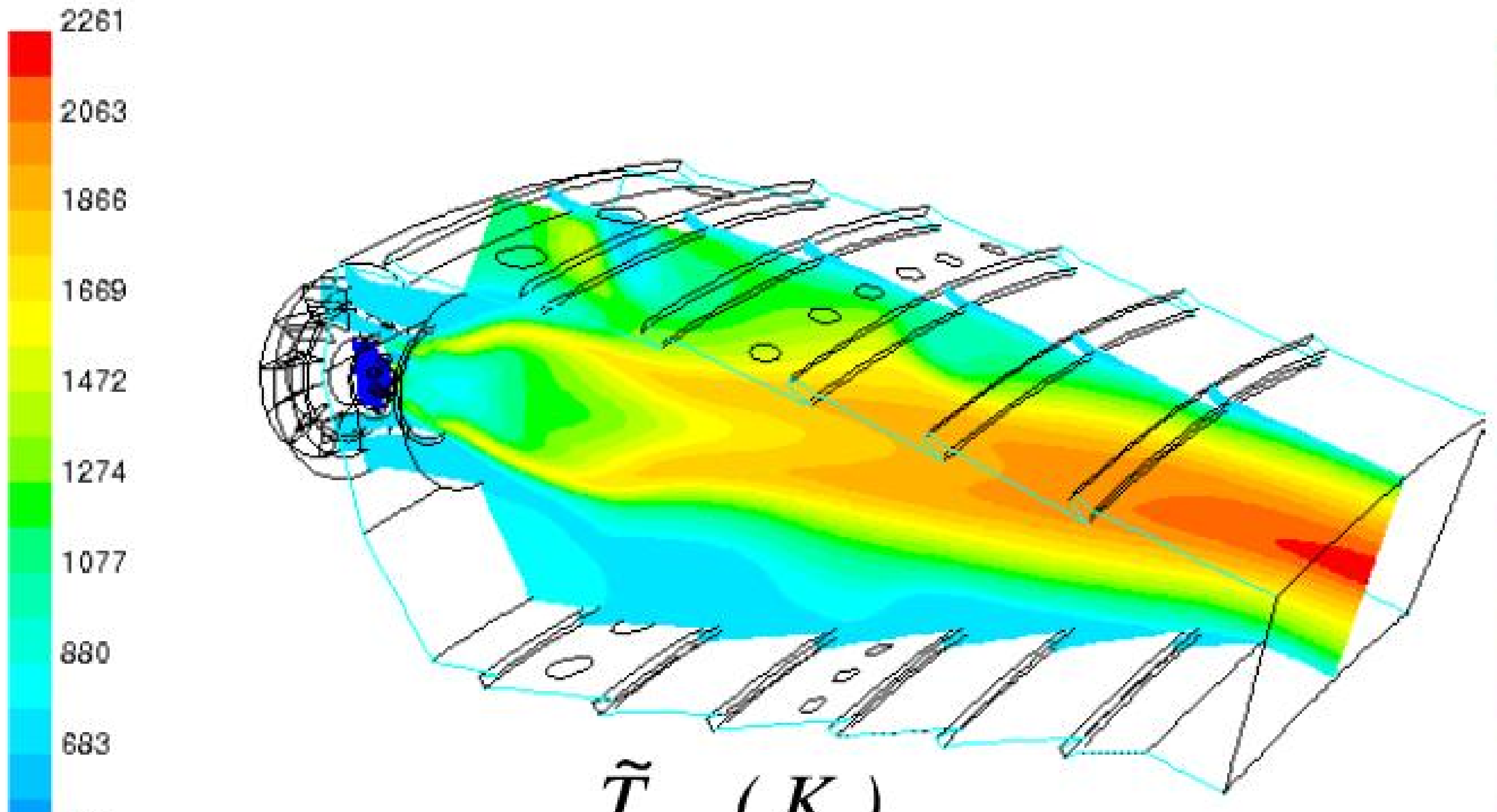

$\tilde{T} \quad (K)$

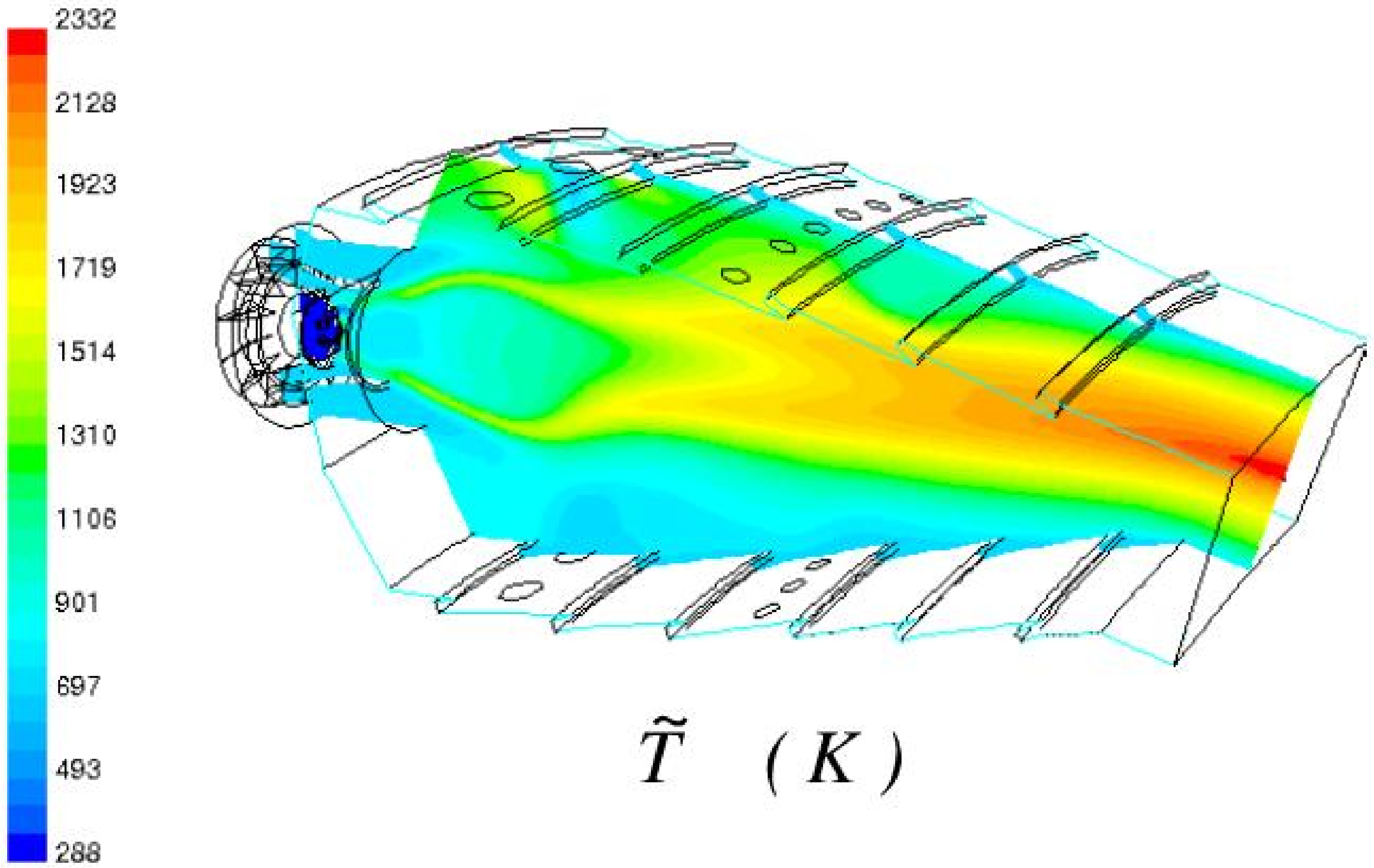

$\tilde{T} \quad (K)$

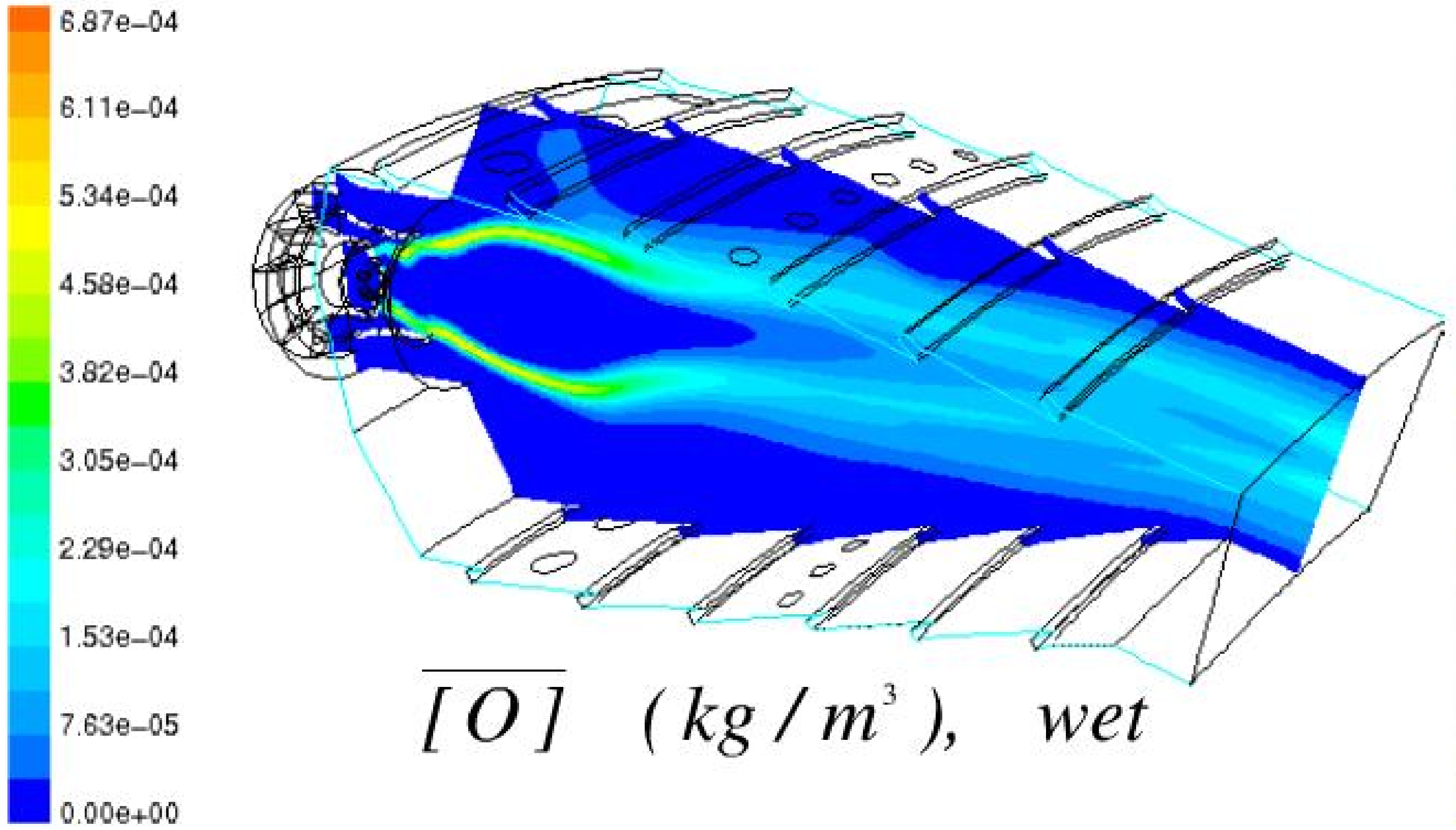

$\overline{[O]} \quad (kg/m^3), \quad wet$

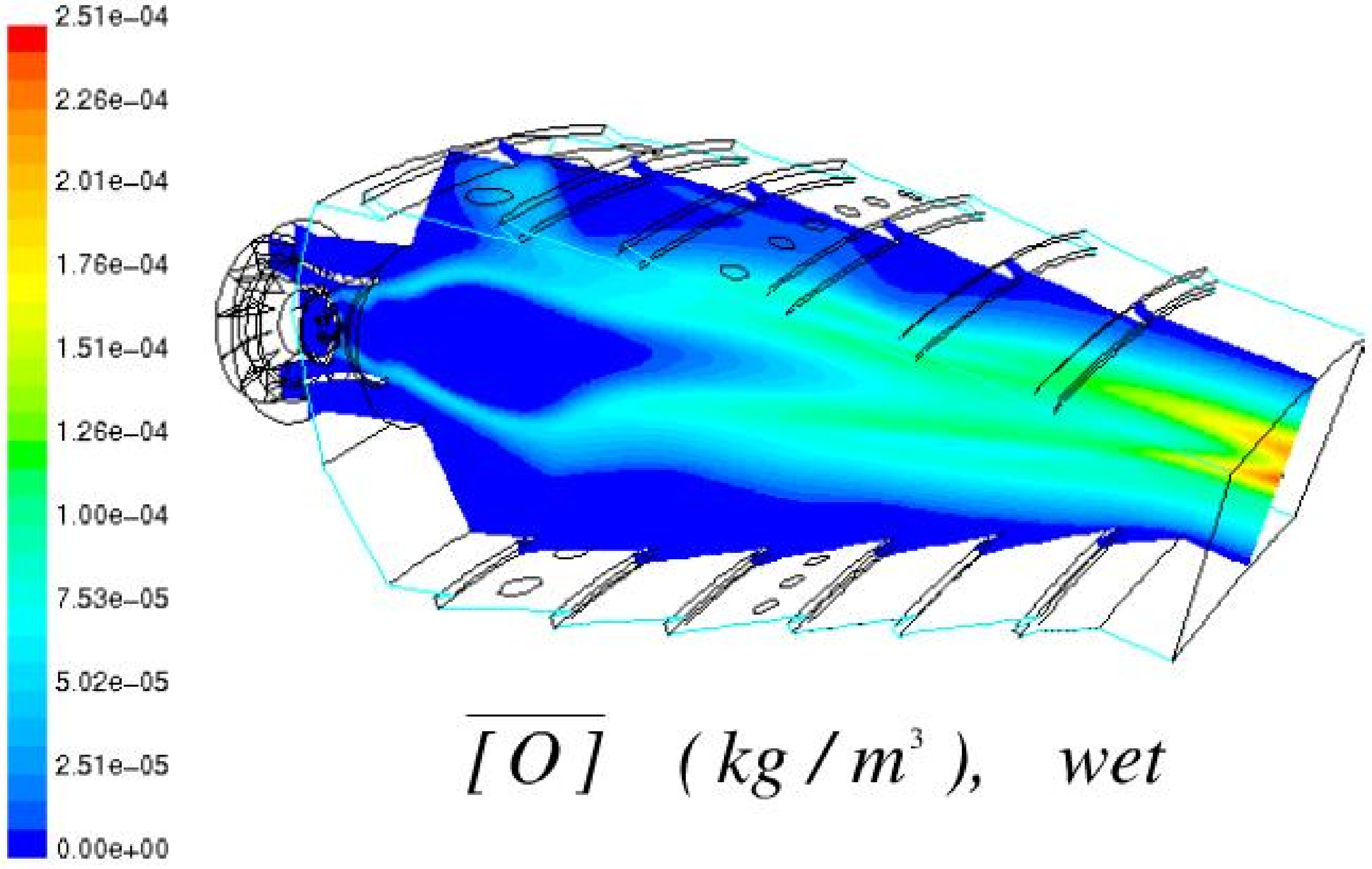

$\overline{[O]} \quad (kg/m^3), \quad wet$

NOx modeling (3)

Plot of *NO* flux exiting outlet vs. combustor load

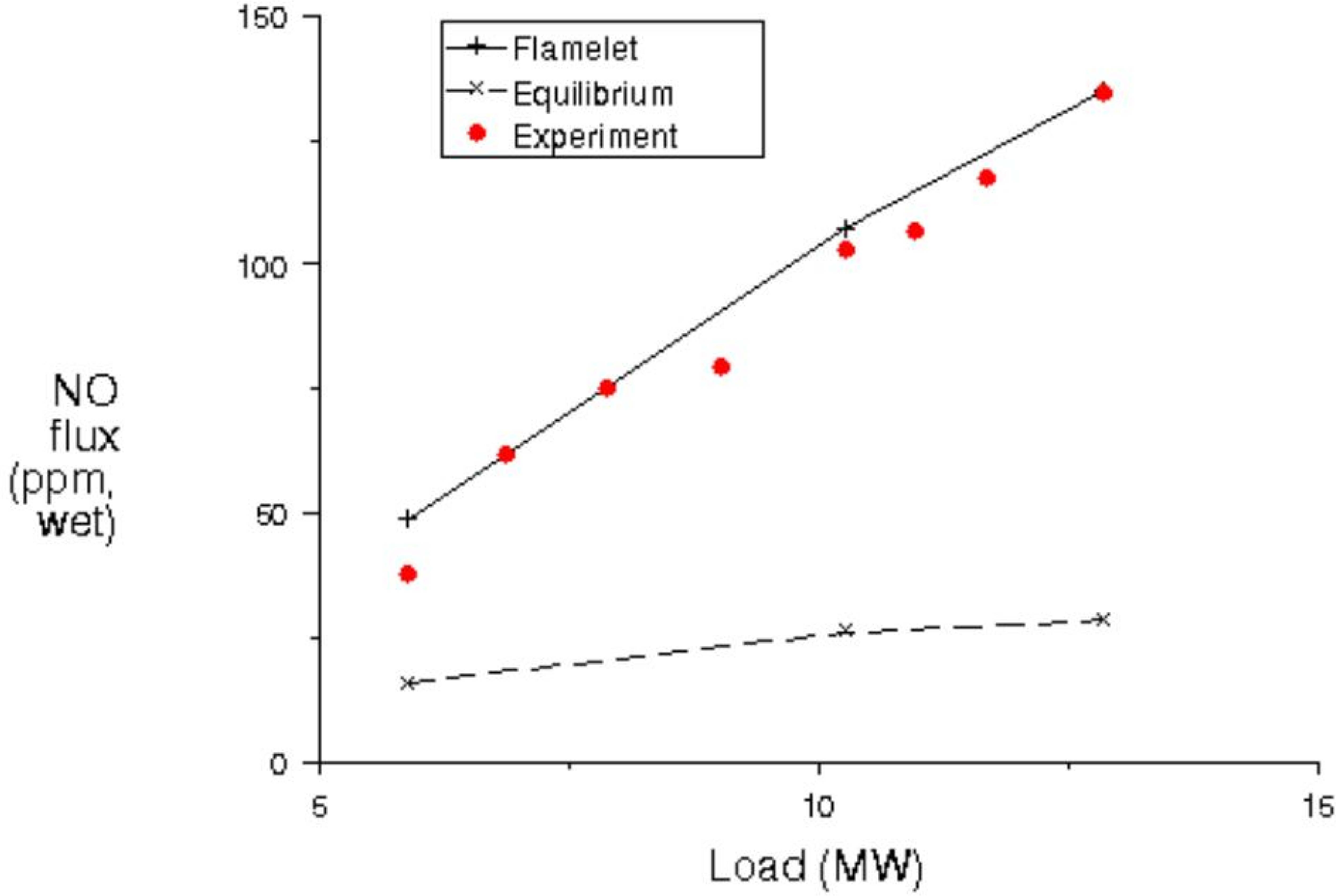

$$NO\ exit\ \ flux = 10^6 \frac{\int \rho X_{NO} \vec{V} \cdot d\vec{A}}{\int \rho \vec{V} \cdot d\vec{A}}$$

Case 3: Large Eddy Simulation of Combustion Instability

- Combustion instability occurs when pressure fluctuations are in phase with heat release fluctuations (Rayleigh criteria)
- Common in lean premixed (low *NOx*) systems
- Unsteady solution - LES!
- Ruhrgas *Sinox I* burner experiments
  - Buchner, H. and Leuckel, W. (1995), Final report of the GERG PC 5, *Acoustics and Burner Noise*

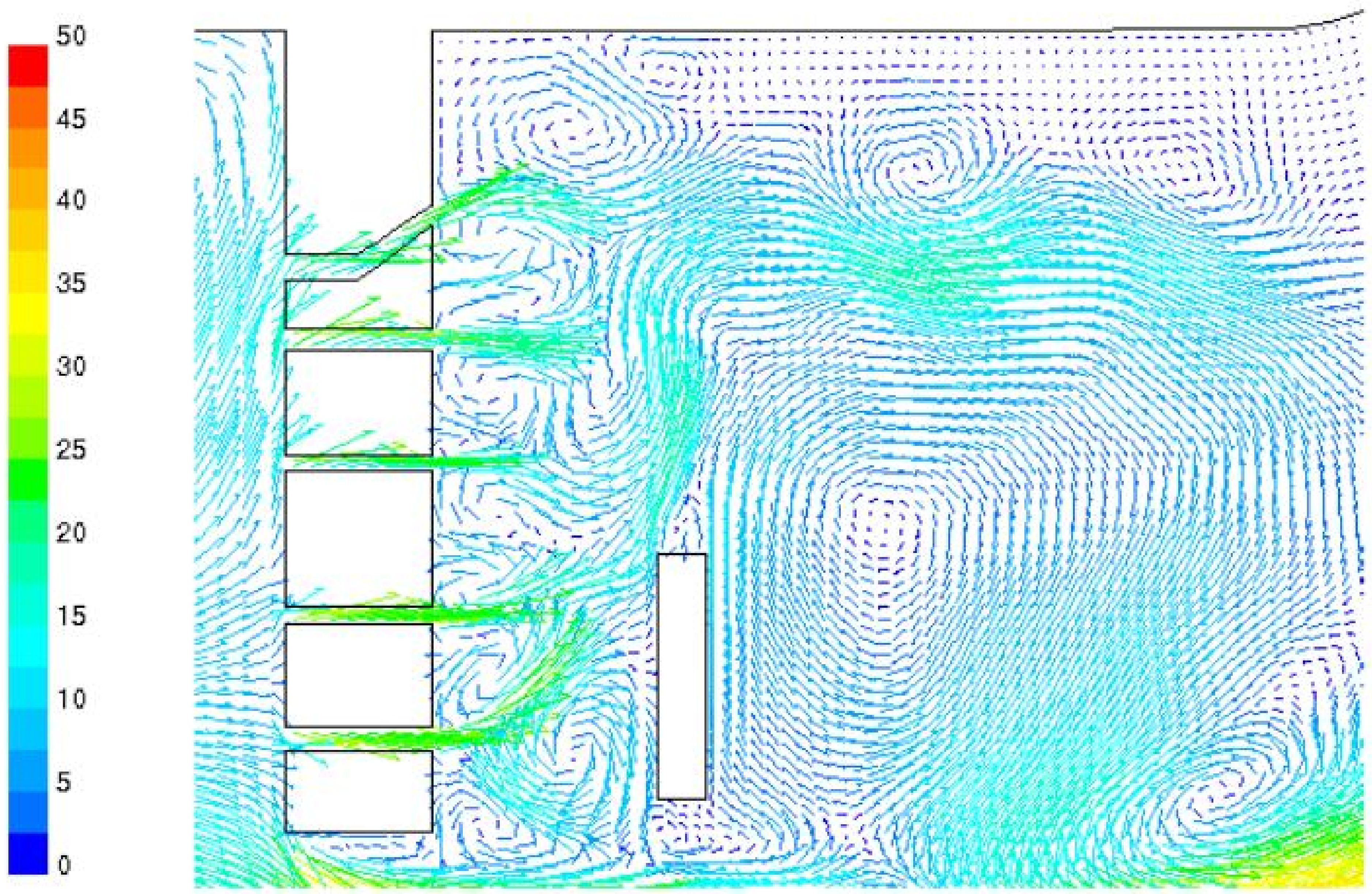

Instantaneous velocity vectors colored by velocity magnitude *(m/s)*

FLUENT

Large Eddy Simulation (1)

Underlying theory

- Direct solution of reacting Navier-Stokes, where all length and time scales are resolved, is computationally intractable

- Large Eddy Simulation (LES)
  - spatially average (filter) the small (sub-grid) eddies and resolve the large turbulent structures in space and *time*
  - The ‘isotropic’ small scales, which dissipate energy from the large scales, are modeled as an eddy viscosity

- LES is more expensive than RANS due to spatial resolution requirements and the unsteady solution

- LES is the appropriate tool for highly unsteady flows with dominant turbulent structures (e.g. certain explosions)

FLUENT

Large Eddy Simulation (2)

Governing equations

- Favre (density weighted) filtering of a general variable, φ

$$\bar{\rho}\tilde{\varphi} = \int_V \rho(x_i')\varphi(x_i')G(x_i - x_i')dx_i'$$

- Box filter, where Δ is the grid width,

$$G(x_i - x_i') = \begin{cases} 1/\Delta_x\Delta_y & if\ |x_i - x_i'| < \Delta/2 \\ 0 & otherwise \end{cases}$$

- Filtered continuity equation

$$\frac{\partial\bar{\rho}}{\partial t} + \frac{\partial}{\partial x_i}(\bar{\rho}\tilde{u}_i) = 0$$

FLUENT

Large Eddy Simulation (3)

Governing equations

- Filtered momentum equation

$$\frac{\partial}{\partial t}(\overline{\rho}\tilde{u}_i)+\frac{\partial}{\partial x_j}(\overline{\rho}\tilde{u}_i\tilde{u}_j)=-\frac{\partial\overline{p}}{\partial x_i}+\frac{\partial}{\partial x_j}\left(\overline{\tau_{ij}}-\tau_{ij}^{sgs}\right)$$

- subgrid stress tensor modeled as (Smagorinsky)

$$\tau_{ij}^{sgs}=\overline{\rho u_i u_j}-\overline{\rho}\tilde{u}_i\tilde{u}_j=2\mu_t\tilde{S}_{ij}+\tfrac{1}{3}\tau_{kk}^{sgs}\delta_{ij}$$

$$\tilde{S}_{ij}=\tfrac{1}{2}\left(\frac{\partial\tilde{u}_i}{\partial\tilde{x}_j}+\frac{\partial\tilde{u}_j}{\partial\tilde{x}_i}\right)$$

$$\mu_t=\overline{\rho}(C_s\Delta)^2\sqrt{2\tilde{S}_{ij}\tilde{S}_{ij}}$$

- Smagorinsky constant $C_s=0.1$

Large Eddy Simulation (4)

Governing equations

- Filtered species *G* equation for premixed combustion

$$\frac{\partial}{\partial t}(\,\bar{\rho}\tilde{G}\,)+\frac{\partial}{\partial x_j}(\,\bar{\rho}\tilde{u}_i\tilde{G}\,)=\rho_u S_t\left|\nabla\tilde{G}\right|$$

- Turbulent flame speed determined by the *RNG* model

$$S_t = S_l\,exp\left((u'/S_t)^2\right)$$

- Laminar flame speed $S_l = 23cm/s$

- Source term in the energy equation, $\rho_u S_t\left|\nabla\tilde{G}\right|h^o$

Solution Parameters

- Axisymmetric model
  - 48*k* quad cells in grid
  - grid size ~ 0.3*mm*, Taylor length scale ~ 0.9*mm*
- QUICK spatial differencing (third order)
- Second order time differencing
  - $\Delta t = 10^{-5}$s

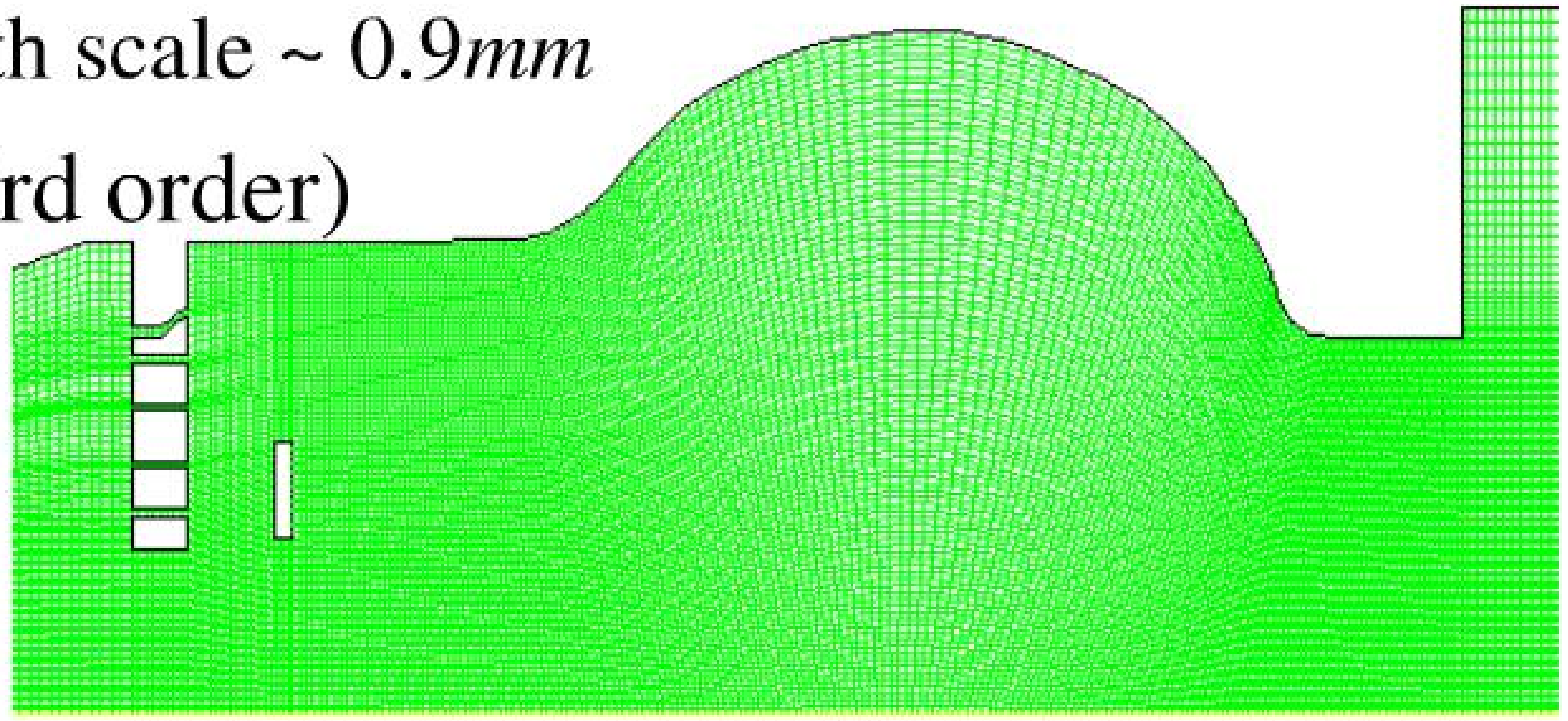

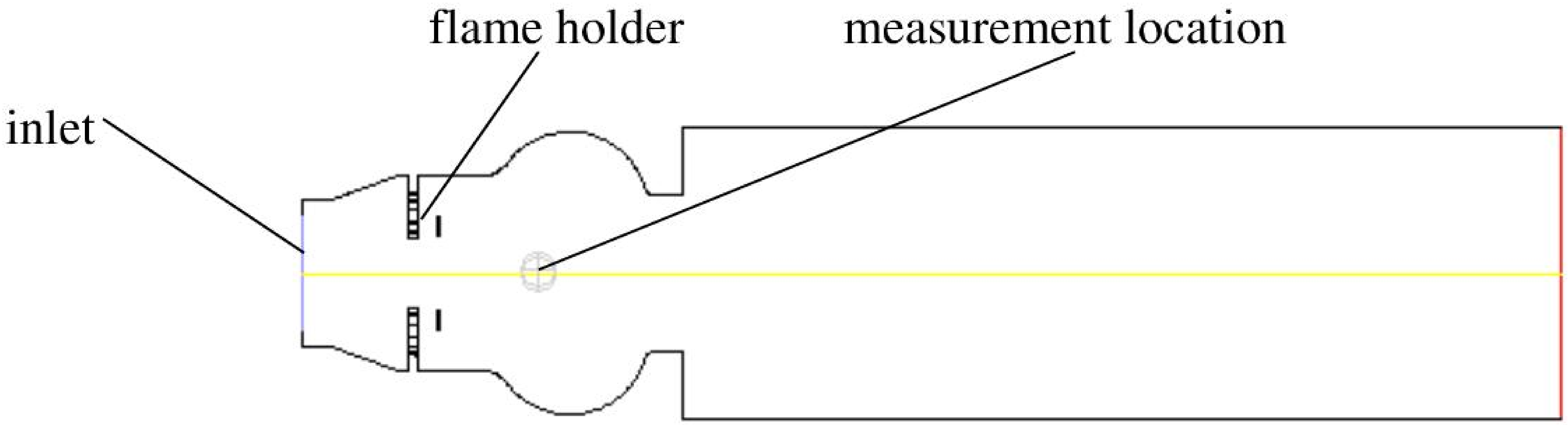

measurement location is 42*mm* downstream of flame-holder

Cold flow results (1)

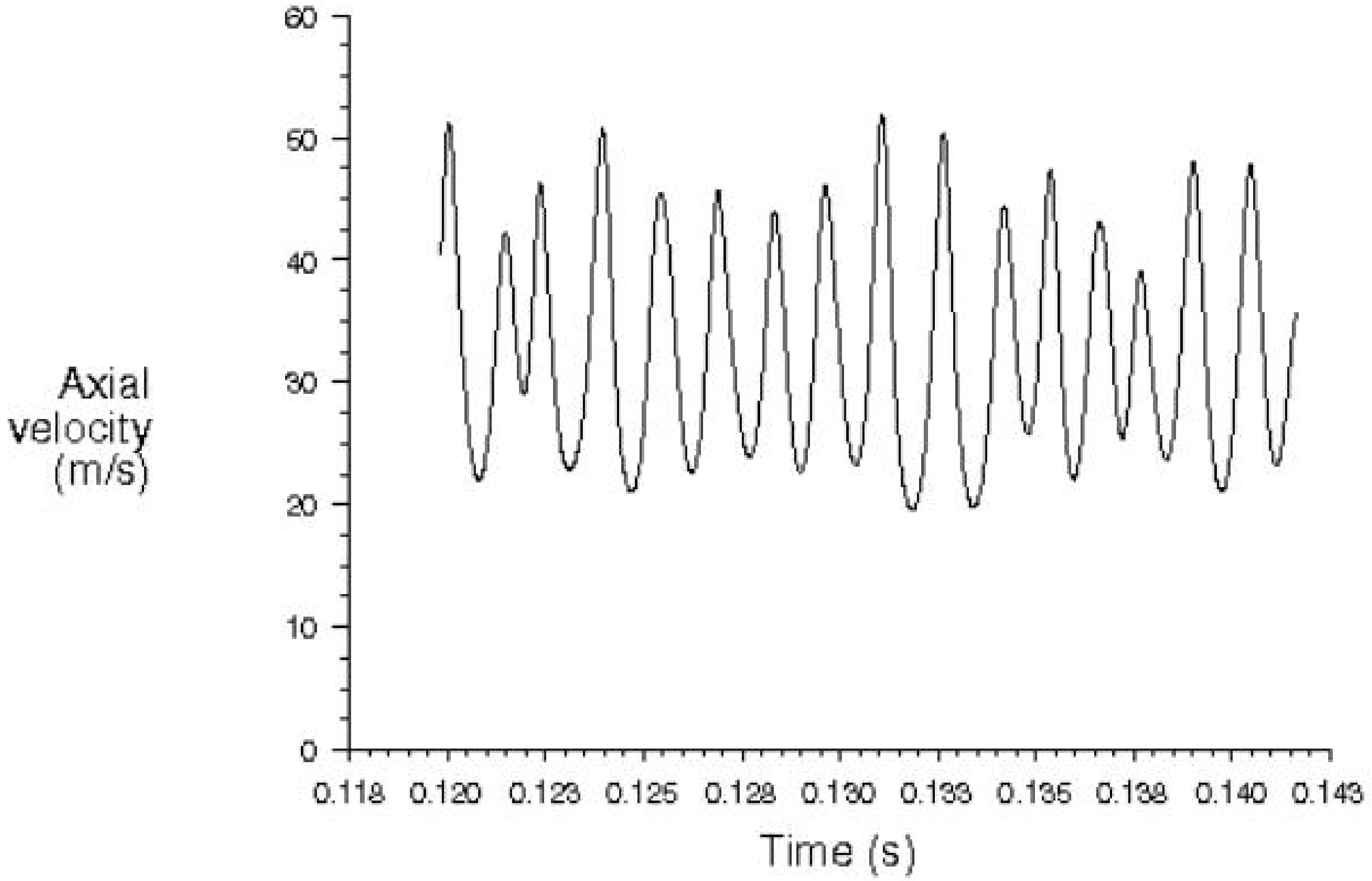

<u>Time trace of axial velocity</u>

flow-rate = 66.3 m^3/h

<u>Discrete Fourier Transform</u>

experimental hot wire voltage signal scaled to match Fluent

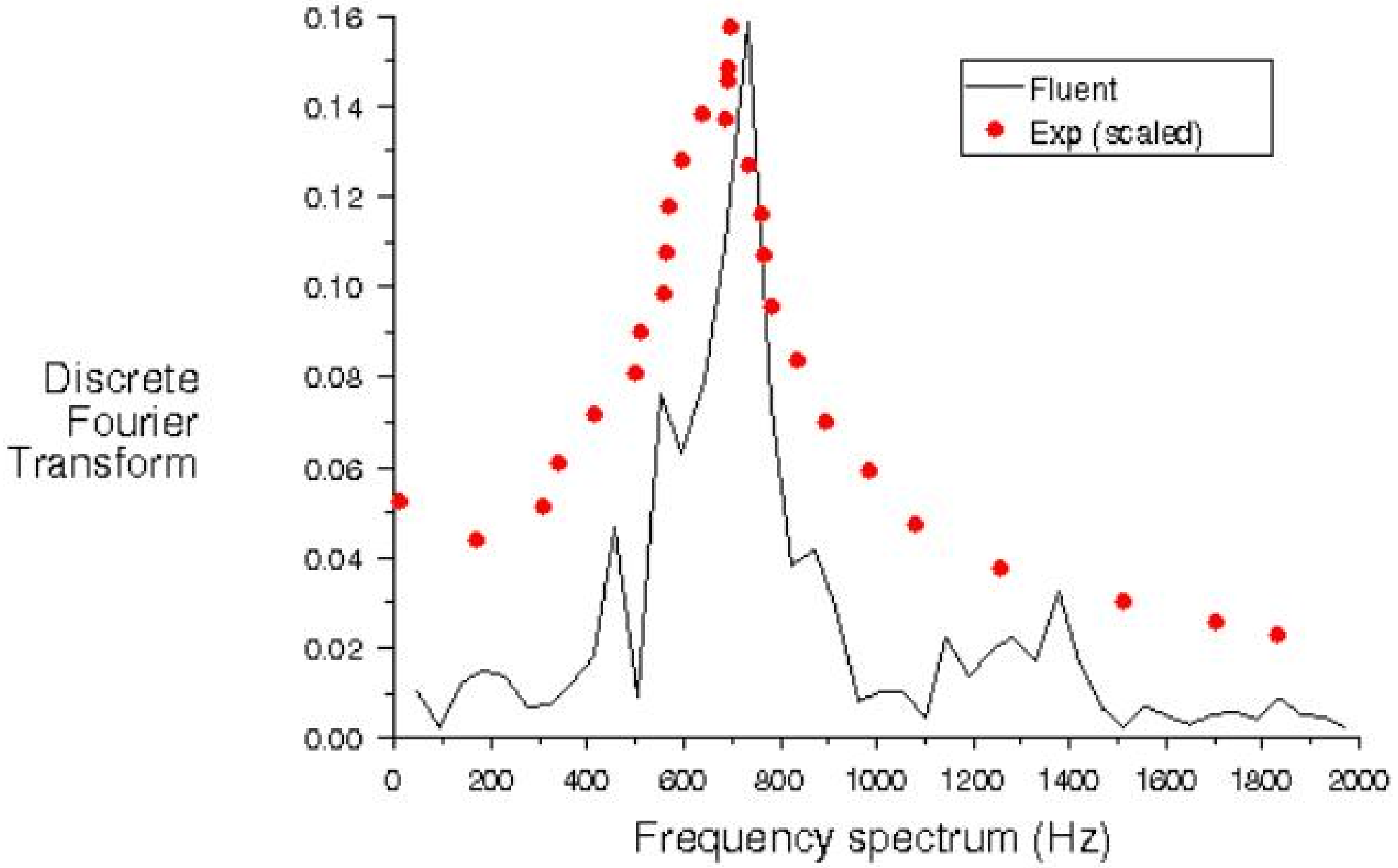

Cold flow results (2)

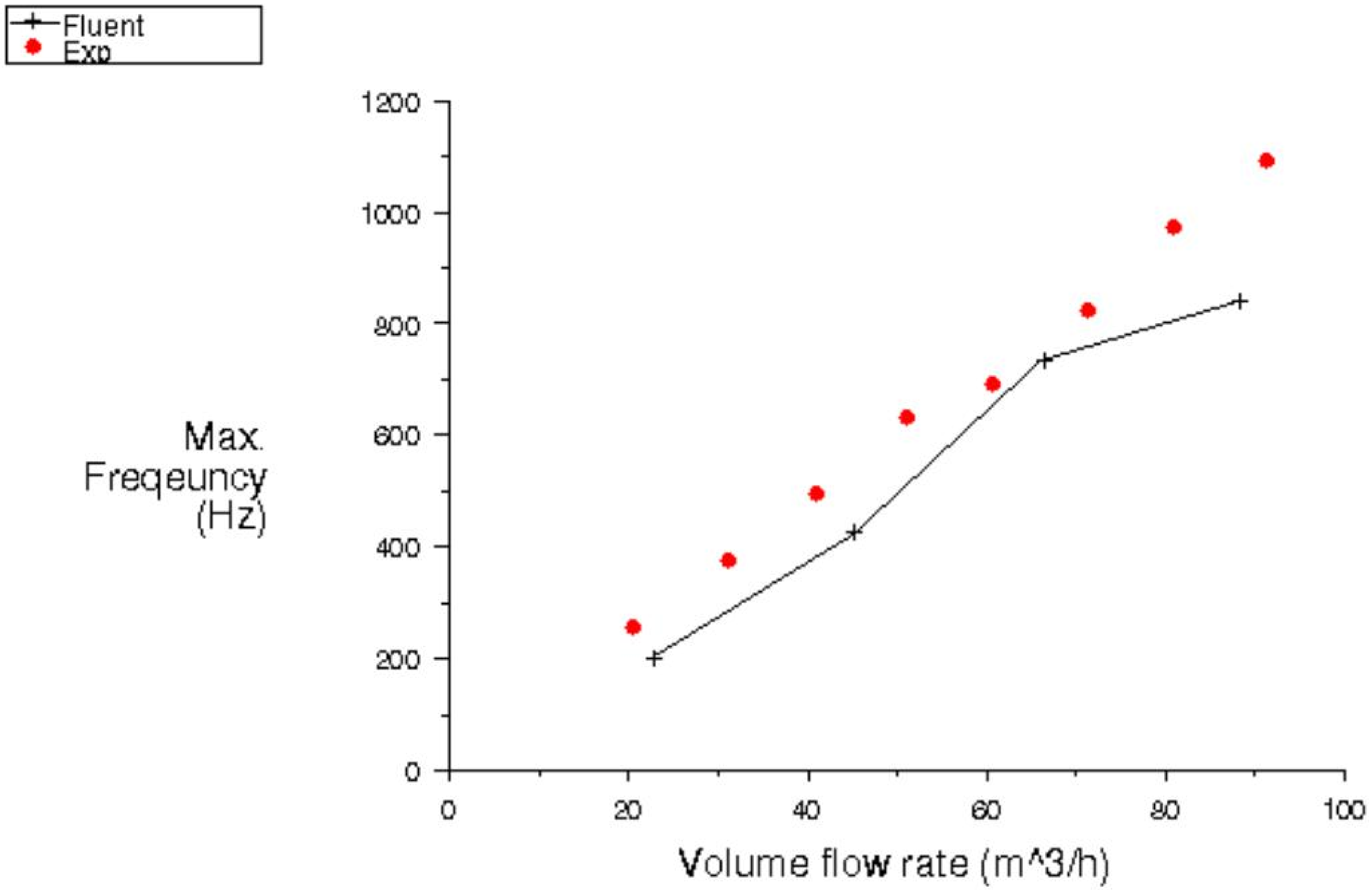

Instability frequency vs. Inlet volume flow rate

Animation of product mass fraction

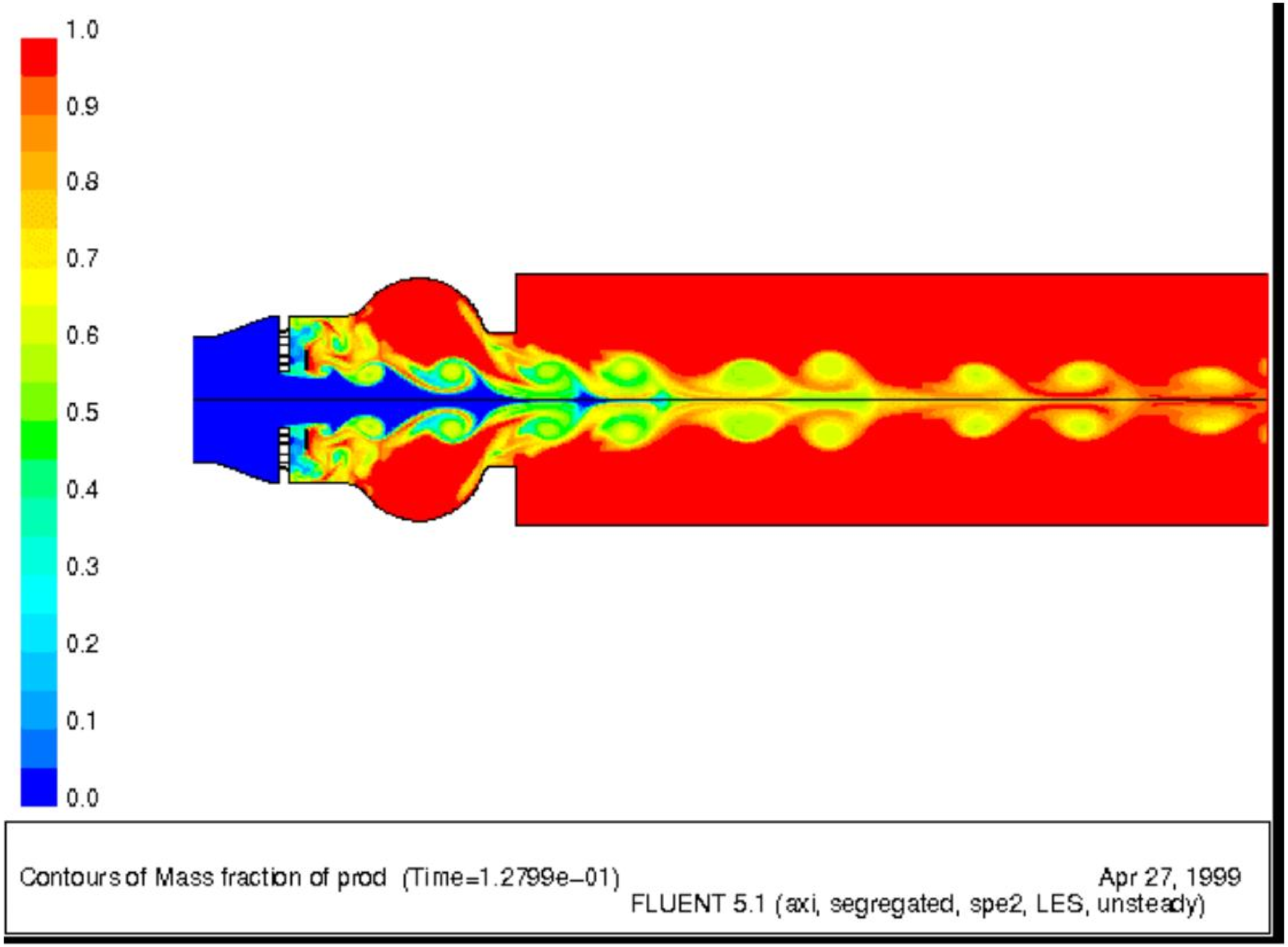

Animation of product mass fraction

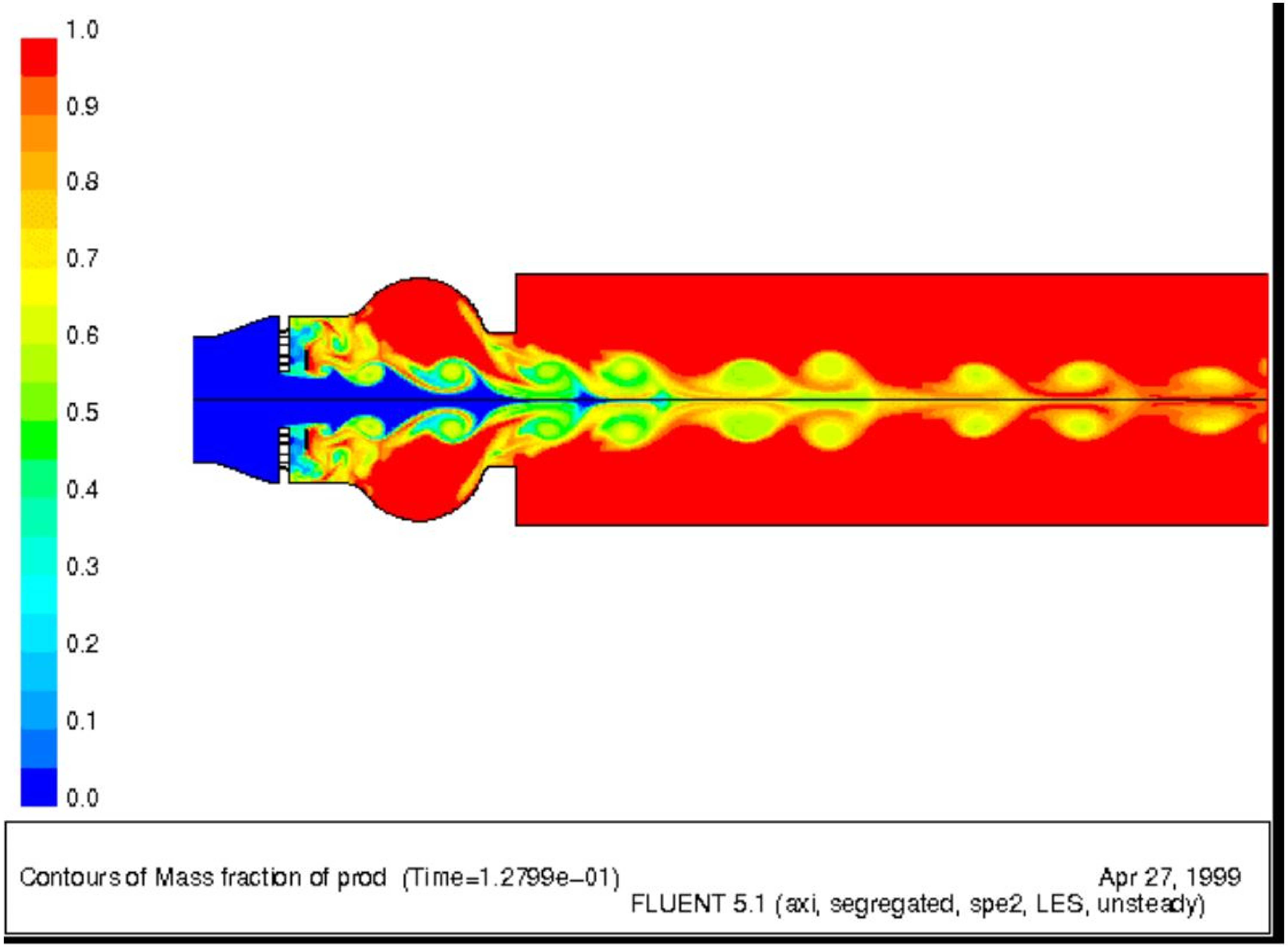

FLUENT

Benchmark for DPM parallelization

- Done for industrial boiler with 155K tet. cells, 6 species with reactions, 500 combusting particles, and 10 stochastic tries per particle

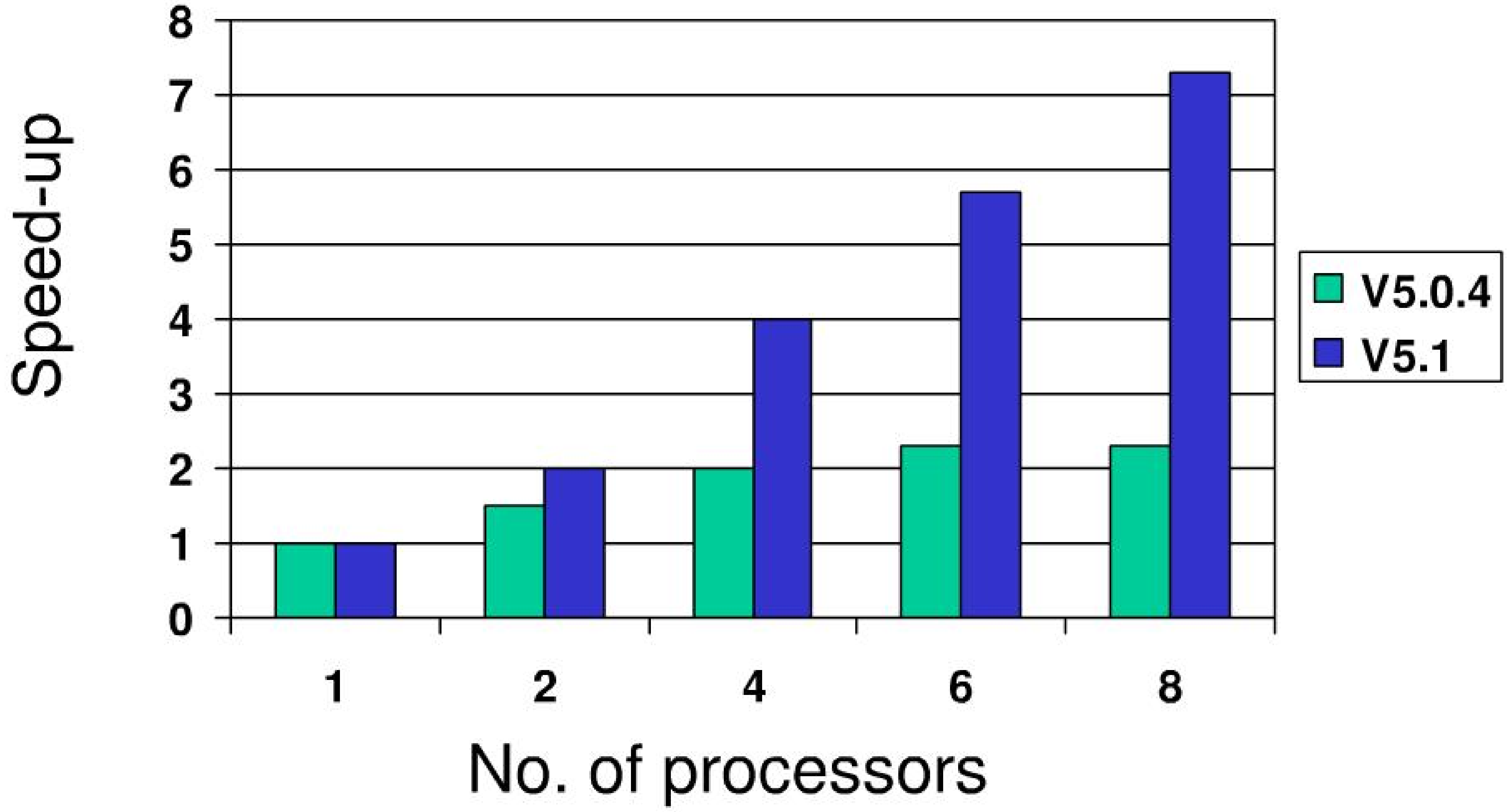

锅炉内的换热流动的数值模拟

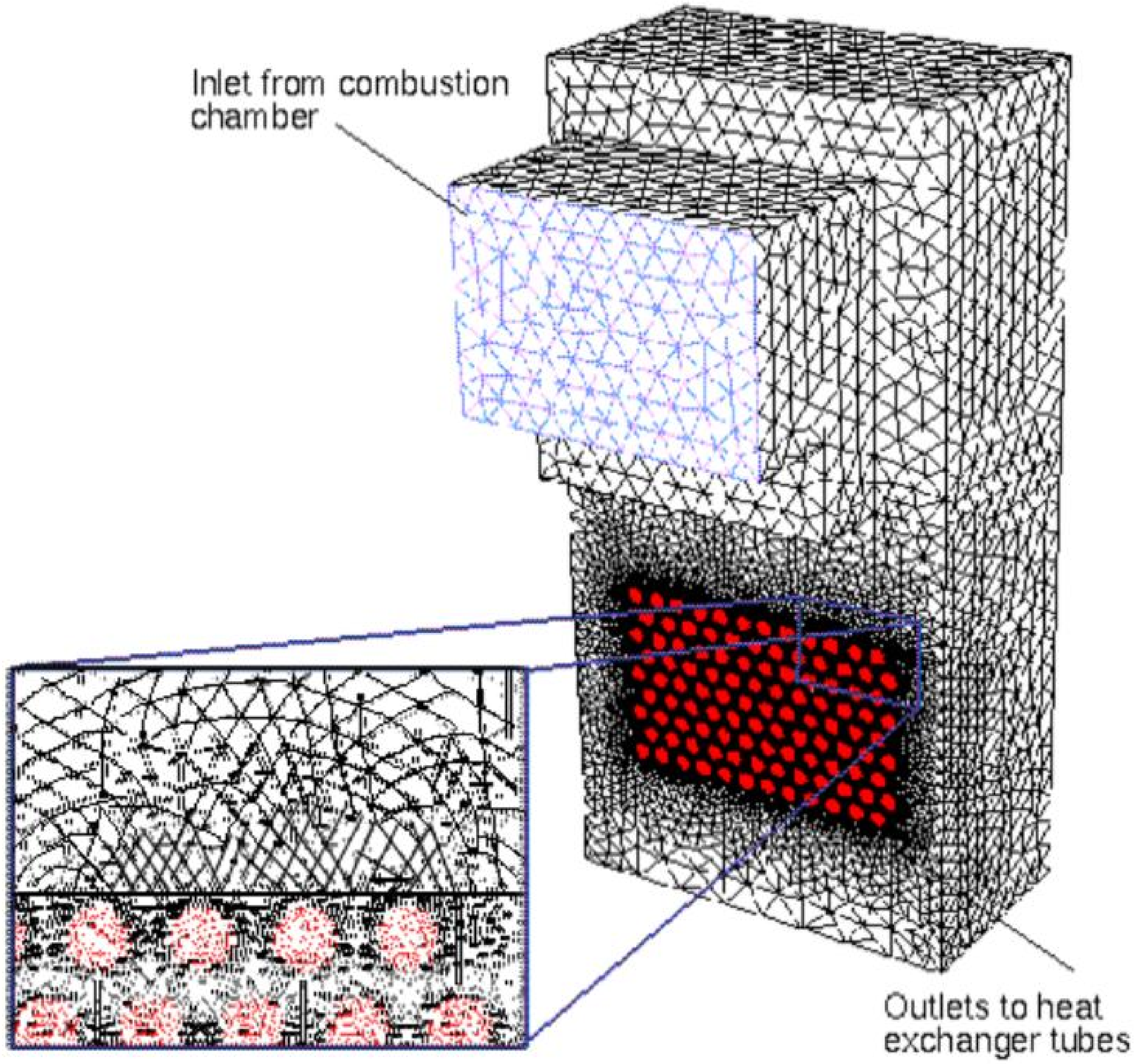

FLUENT

锅炉内的换热流动的数值模拟

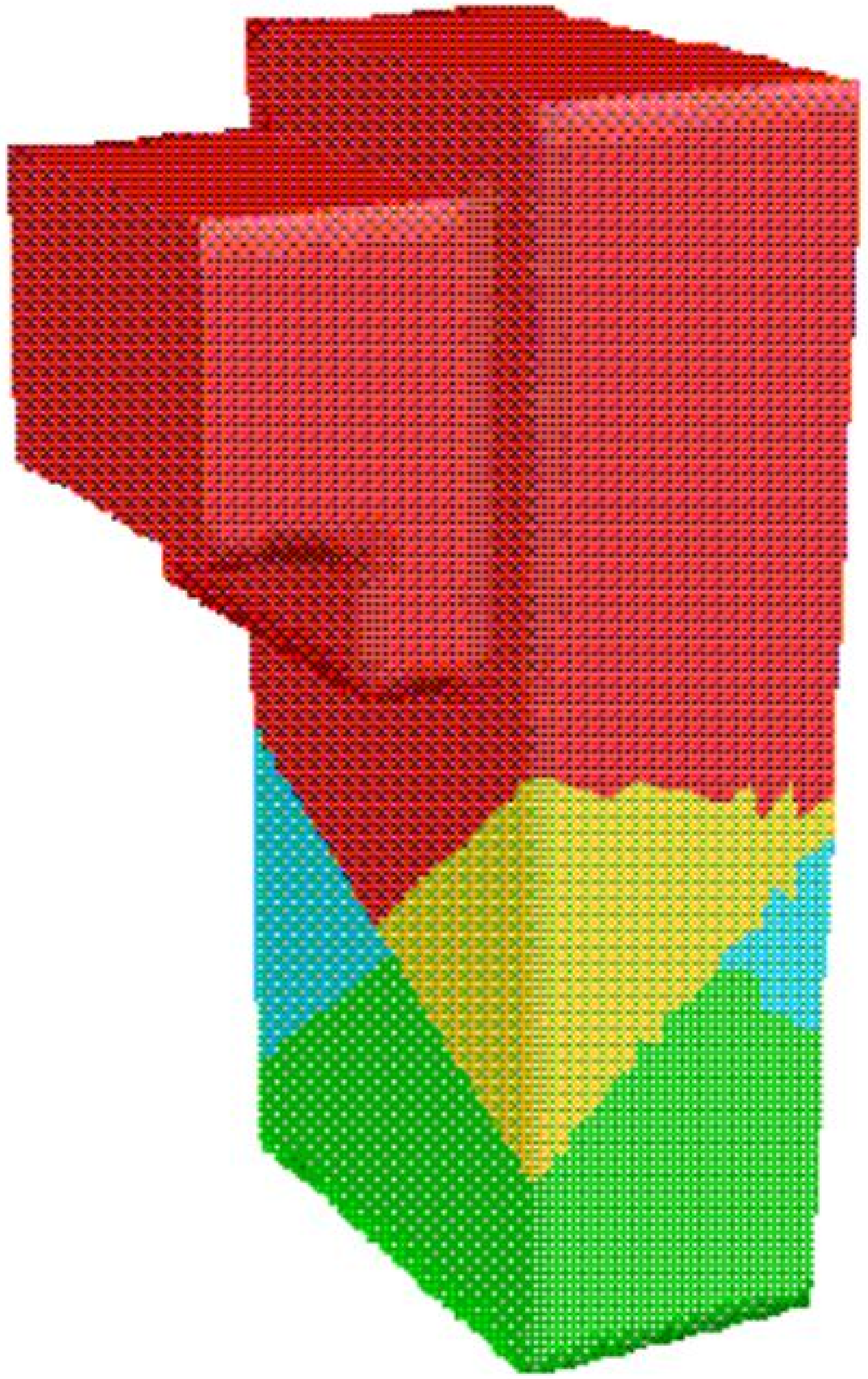

4 processor

3.8 speed up

锅炉内的换热流动的数值模拟

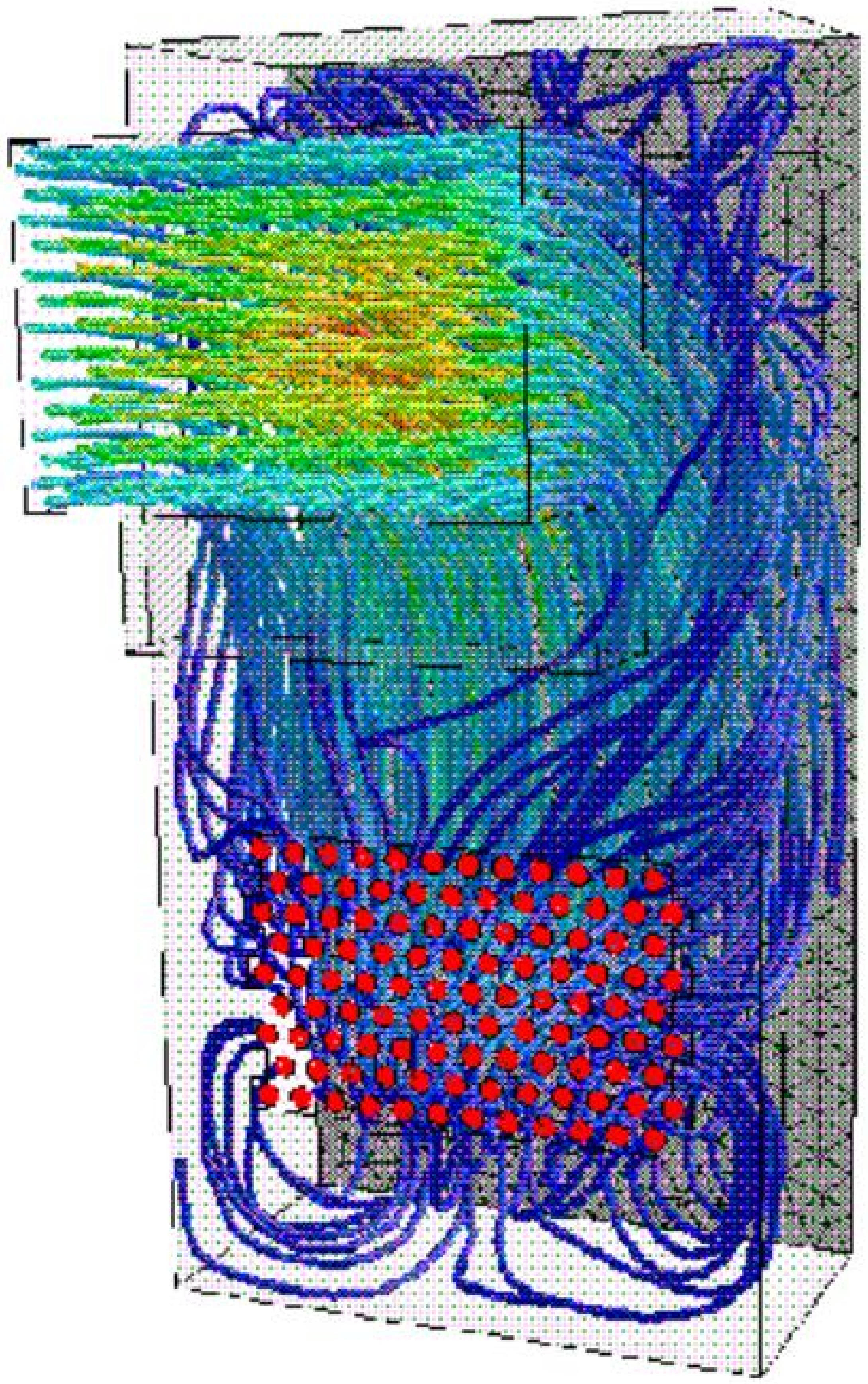

Flow streamlines

锅炉内的换热流动的数值模拟

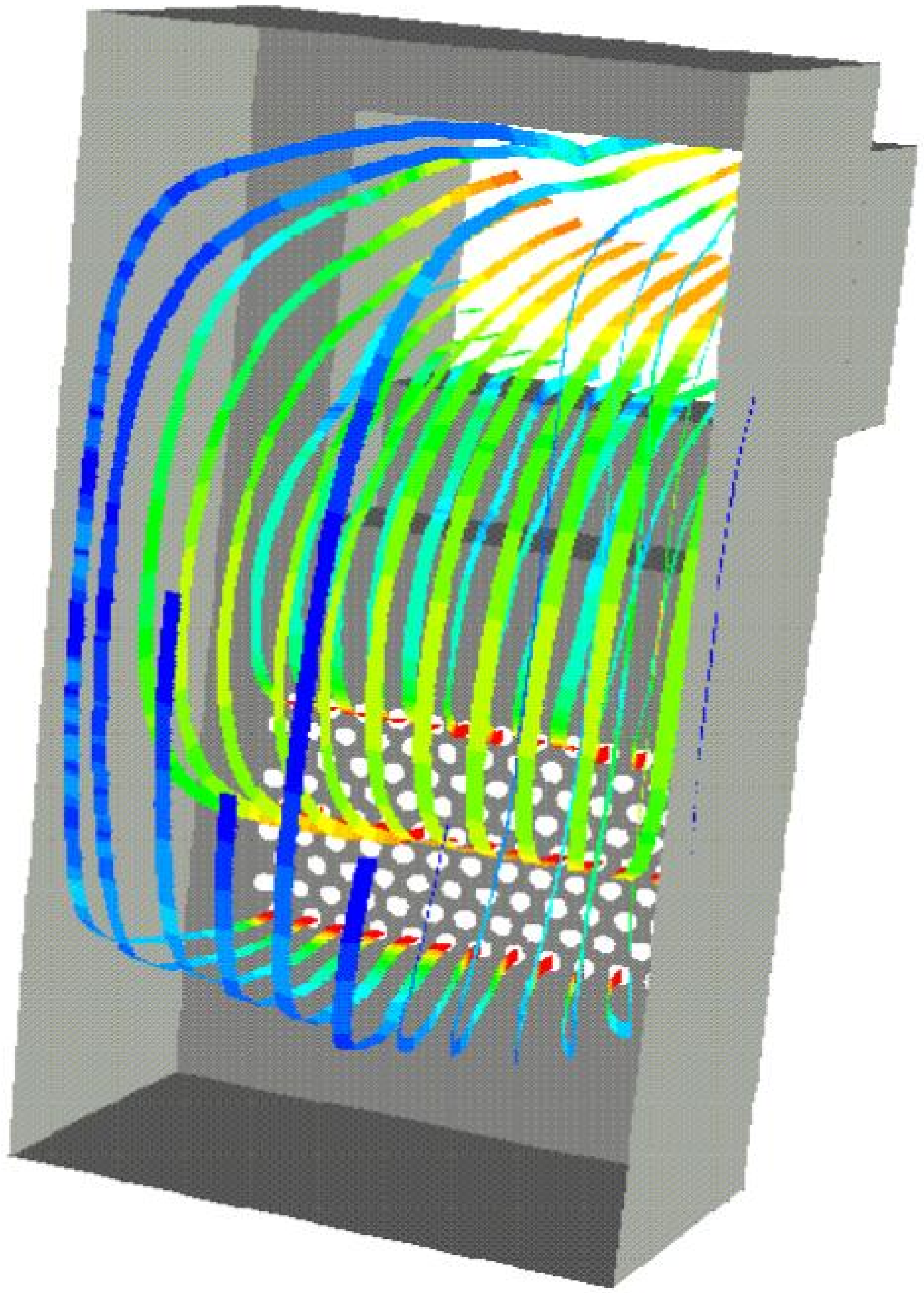

FLUENT